# Loop-AM3440 Access DCS-MUX

**AM3440-A**

**AM3440-B**

**AM3440-C**

## Features

- Full frontal access (ETSI) Shelf
- DACS (Digital Access Cross-Connect System) with full non-blocking nx64K (DS0) cross-connect support Dual controller, dual power with load sharing
- E1/T1/TDMoEA 1+1 protection, switching time <50ms
- DS0 Level Nx64K circuit protection
- PDH ring protection, QE1/QT1, FOM, Mini QE1/QT1
- Console, Telnet, and Inband management support SNMP v.1 and v.3
- Craft interface port for connection to external Intelligent Front Panel
- Compatible to a SNMP based GUI network management system and supported by Loop iNET and Loop iNMS
- Three chassis types available: AM3440-A, AM3440-B, AM3440-C
- Support SAToP(CCPA T1 SAToP*), CESoPSN, and MEF8 for emulation of TDM circuits

All the plug-in cards are hot-pluggable

| Item | AM3440-A | AM3440-B | AM3440-C |
|---|---|---|---|
| Chassis | 5U | 2.5U | 3U |
| # of Mini-slots | 4 | 4 | 4 |
| # of Single slots | 12 | 3 | 5 |
| Maximum E1 Channels | 64 | 28 | 36 |
| Maximum T1 Channels | 52 | 16 | 24 |
| Cross-Connect Backplane Capacity | 128 Mbps | 56 Mbps | 72 Mbps |

* Future Option

## Description

The Loop-AM3440-A/B/C series products are Access DCS-MUXs which support multiplexing of various digital access interfaces into E1 or T1 lines for convenient transport and switching. The Loop-AM3440 Access DCS-MUX provides access for a variety of TDM, packet, and voice interfaces detailed on the next page. These interfaces are compatible with other Loop products. The AM3440 can act as a mini DACS: one or more of the WAN ports can be used as a Drop & Insert function with fractional E1/T1 lines, which can be muxed into a full E1/T1 line. Furthermore, the AM3440 also supports TDM circuit emulation protocols. TDM data and voice services can be encapsulated as Pseudowires and transported over ETH/IP/MPLS packet switch networks.

The AM3440 controller module provides full non- blocking Nx64K cross-connect matrix up to 2048 DS0. System redundancy is available in dual controller and power modules, making it an excellent fit for critical applications.

While 1+1 link protection is available for E1, T1, and TDMoEA modules, path protection for end-to-end Nx64K circuit protection is available for 3E1/T1.

The AM3440 supports local control and diagnostics by using a VT-100 terminal connected to the console port. It supports Ethernet, Telnet, and SNMP, so that it can be controlled and diagnosed from remote ends. An in-band management channel with GUI is available as well.

Each of the 3 models of AM3440-A, B, and C has a number of plug-in slots in regular size and mini size. (Card size to slot compatibility is detailed on the next page.) Most of the plug-in cards have LED indications.

The AM3440 consists of a rugged reinforced aluminum chassis, giving this equipment a durable structure and a long-lasting physical life.

## Loop-AM3440 plug-in cards:

The mini-slot cards plug into the mini-slots of the AM3440. The single-slot cards plug into single slots. The dual-slot cards plug into two adjacent single slots.

| | Controller | CCB | CCPA | CCB | CCPA | CCB | CCPA |
|---|---|---|---|---|---|---|---|
| **Tributary Modules** | **Plug-in cards** / **Chassis** | **AM3440-A** | | **AM3440-B** | | **AM3440-C** | |
| **Single-Slot** | 3-channel E1 | # | √ | × | √ | # | √ |
| | 3-channel T1 | # | √ | × | √ | # | √ |
| | 4-channel E1 | √ | √ | √ | √ | √ | √ |
| | 4-channel T1 | √ | √ | √ | √ | √ | √ |
| | 2-channel G.SHDSL (2 pairs) w/o line power | √ | × | √ | × | √ | × |
| | 4-channel G.SHDSL (1 pair) w/o line power | √ | × | √ | × | √ | × |
| | 8-channel G.703 card at 64 Kbps data rate | √ | √* | √ | √* | √ | √* |
| | 8-channel Dry Contact I/O Type | √ | √ | √ | √ | √ | √ |
| | 8-channel Dry Contact I/O Type B | √ | √ | √ | √ | √ | √ |
| | 8-channel 2W/4W E&M (8E&M) | D | √* | D | √* | D | √* |
| | 8-channel 2W/4W E&M (8E&MA) | √ | √ | √ | √ | √ | √ |
| | 12-channel FXS | D | √* | D | √* | D | √* |
| | 12-channel FXSA | √ | √ | √ | √ | √ | √ |
| | 12-channel FXOA | √ | √ | √ | √ | √ | √ |
| | 12-channel Magneto | √ | √* | √ | √* | √ | √* |
| | 1-channel low speed optical (C37.94) | √ | √ | √ | √ | √ | √ |
| | 4-channel low speed optical (C37.94) | √ | √ | √ | √ | √ | √ |
| | 8-channel RS232 with X.50 subrate | √ | √ | √ | √ | √ | √ |
| | 6-port RS232 card (6RS232A) with V.110 encoding | √ | √* | √ | √* | √ | √* |
| | 8-LAN-port/ 64-WAN-port Router-B | √ | √ | √ | √ | √ | √ |
| | 4-channel TDMoEA | √ | √ | √ | √ | √ | √ |
| | 8-channel Data Bridge | √ | × | √ | × | √ | × |
| | 1FOMA | √ | × | √ | × | √ | × |
| | 6-channel UDTEA | √ | √ | √ | √ | √ | √ |
| | 8-channel UDTEA | √ | √ | √ | √ | √ | √ |
| | 8-channel OCU-DP | √ | × | × | × | × | × |
| | 6-channel Co-Directional card (6CDA) | √ | × | √ | × | √ | × |
| | VOIPGA interface card | √ | √* | √ | √* | √ | √* |
| **Dual-Slot** | Transfer Trip card (TTA) | √ | × | √ | × | √ | × |

| | | | | | | | |
|---|---|---|---|---|---|---|---|
| | 1-channel E1 (Single E1 interface) with 75ohm | √ | √ | √ | √ | √ | √ |
| | 1-channel E1 (Single E1 interface) with 120ohm | √ | √ | √ | √ | √ | √ |
| | 1-channel T1 (Single T1 interface) | √ | √ | √ | √ | √ | √ |
| | Mini Quad E1 (Four E1 interfaces) with 75ohm | √ | √ | √ | √ | √ | √ |
| | Mini Quad E1 (Four E1 interfaces) with 120ohm | √ | √ | √ | √ | √ | √ |
| | Mini Quad T1 (Four T1 interfaces) | √ | √ | √ | √ | √ | √ |
| | Fiber Optical Interface | √ | √ | √ | √ | √ | √ |
| | LS Optical M1C37 Card | √ | √ | √ | √ | √ | √ |
| | 1-channel X.21 | √ | √ | √ | √ | √ | √ |
| | 1-channel V.35 | √ | √ | √ | √ | √ | √ |
| **Mini-Slot** | 1-channel RS232 | √ | √ | √ | √ | √ | √ |
| | 1-channel EIA530 | √ | √ | √ | √ | √ | √ |
| | 1-channel OCU-DP | × | × | √ | × | √ | × |
| | Quad E&M (QEMA) | ## | ## | √ | √ | √ | √ |
| | QFXSA (Four FXS voice interface) | ## | ## | √ | √ | √ | √ |
| | QFXO (Four FXO voice interfaces) | ## | ## | √ | √ | √ | √ |
| | QMAGA (Four magneto voice interfaces) | ## | ##* | √ | √* | √ | √* |
| | 2-LAN port/64 WAN port Router-A | √ | √ | √ | √ | √ | √ |
| | 3-channel Terminal Server | √ | × | √ | × | √ | × |
| | Echo Canceller card | √ | √ | √ | √ | √ | √ |
| | Analog Bridge card | √ | √ | √ | √ | √ | √ |

**Note:** √ = Supported
× = Not Supported
# = Supported by Chassis CHAJ, CHAK and CHCJ only
## = Supported by Chassis CHAK only
D =Discontinued
* = Future Option

## Controller and Function:

| Function \ Controller | CCB | CCPA |
|---|---|---|
| LCD[Note] | √ | × |
| DB9 console[Note] | √ | × |
| USB console | √ | √ |

**Note:** Loop-ACC-CAB-HDB15M-25-DB09F-**G** is included for Console/LCD Interface connection.

## Ordering Information

To specify options, choose from the list below:

**Notes:**

1. RoHS compliant units are identified by the letter **G** appearing at the end of ordering code.
2. AM3440 chassis types:

   **AM3440-A:** 5U chassis with 128 Mb/s cross-connect capacity backplane.

   **AM3440-B:** 2.5U chassis with 56 Mb/s cross-connect capacity backplane.

   **AM3440-C:** 3U chassis with 72 Mb/s cross-connect capacity backplane.

   **AM3440-D:** 2U chassis with 72 Mb/s cross-connect capacity backplane. Support Mini Plug-in Modules only. Please refer to separate AM3440-D brochure.

| Model | Description | Note |
|---|---|---|
| ***Main Unit*** | | |
| Loop-AM3440-CHAJ-**G** | AM3440-A type Chassis. Wideband Main Unit without CPU, power and plug-in cards | 19”/23” ear mount included.<br>Loop-AM3440-CHAJ-**G** is applicable to use with 3E1/3T1 card for DS0-SNCP circuit level protection. |
| Loop-AM3440-CHAK-**G** | AM3440-A type Chassis. Wideband Main Unit without CPU, power and plug-in cards | 19”/23” ear mount included.<br>Loop-AM3440-CHAK-**G** is applicable to use with mini voice cards and with 3E1/T1 for DS0-SNCP circuit level protection. |
| Loop-AM3440-CHB-**G** | AM3440-B type Chassis. Wideband Main Unit without CPU, power and plug-in cards | 19”/23” ear mount included.<br>Doesn’t support DS0-SNCP circuit level protection |
| Loop-AM3440-CHCJ-**G** | AM3440-C type Chassis. Wideband Main Unit without CPU, power and plug-in cards | Loop-AM3440-CHCJ-**G** is applicable to use with 3E1/3T1 card for DS0-SNCP circuit level protection. |
| ***CPU Module*** | | |
| Loop-AM3440-CCB-**mgmt**-**G** | CPU card with E1 External Clock and management software | Default is E1 External Clock; for T1 selection, please change manually. (order two for redundancy)<br><br>For **mgmt** option, please refer to the following table for detailed information.<br><br>Loop-ACC-CAB-HDB15M-25-DB09F-**G** is included for Console/LCD Interface connection. |
| Loop-AM3440-CCPA-**mgmt**-**G** | Packet controller module, support cross-connect function and two physical Combo GbE (SFP/RJ45) interface for TDMoE uplink. One USB console port and one RJ45 SNMP port on board.<br>● Supports SAToP (CCPA T1 SAToP*), CESoPSN, and MEF-8<br>● Up to 64 Pseudowires<br>● Supports SyncE | Loop-ACC-CAB-HDB15M-100-RJ48M-**G** is applicable to use with Clock interface connection. Please order conversion cable separately. |
| Loop-AM3440-CCPA-NPW-**mgmt**-**G*** | Packet controller module with two Combo GbE (SFP/RJ45) interface, one USB console port and one RJ45 SNMP port on board.<br>● Supports SyncE | Loop-ACC-CAB-HDB15M-100-RJ48M-**G** is applicable to use with Clock interface connection. Please order conversion cable separately.<br><br>If TDMoE uplink function is required in the future, it can be activated via an activation license. |

■ Where **mgmt** is used to select the following functions. Please replace **mgmt** with your selection, or leave it blank for nothing.

| mgmt= | Description | Note |
|---|---|---|
| **LCT** | Loop-AM3440-LCT activation license | Used with Loop-LCT Graphical Configuration Software for management |
| **[blank]** | No configuration tool for management | If LCT is required in the future, it can be activated by an activation license. |

***Mini Plug-in Module*** (Select 1 to 4 cards from list below)

| Model | Description | Note |
|---|---|---|
| Loop-AM3440-E75-**G** | 1-channel of E1plug-in card w/ 75 ohm | |
| Loop-AM3440-E120-**G** | 1-channel of E1 plug-in card w/ 120 ohm | |
| Loop-AM3440-T1-**G** | 1-channel T1 plug-in card | |
| Loop-AM3440-M4T1-**G** | Mini Quad T1 plug-in card | Includes a three meter conversion cable (Loop-ACC-CAB-DB25M-300-4RJ48M) |
| Loop-AM3440-M4E75-**G** | Mini Quad E1 plug-in card with 75 ohm | Includes a three meter conversion cable (Loop-ACC-CAB-DB25M-300-8BNCM) |
| Loop-AM3440-M4E120-**G** | Mini Quad E1 plug-in card with 120 ohm | Includes a three meter conversion cable (Loop-ACC-CAB-DB25M-300-4RJ48M) |
| Loop-AM3440-RTA-**G** | 2-LAN ports/64 WAN port router/bridge plug-in card | |
| Loop-AM3440-FOM-opt-**G** | Fiber Optical plug-in card | For **opt** option, please refer to the table below for detail information |
| Loop-AM3440-TS-**G** | 3-chanel Terminal Server plug-in card | Includes a one meter conversion cable (Loop-ACC-CAB-DB44M-100-2DB25F-1DB09F-TS) |
| Loop-AM3440-1ODP | 1 port OCU-DP Interface card | For AM3440-CHAK, CHB, and CHC only<br><br>Only non-RoHS compliant model available<br><br>**Limited Quantity** |
| Loop-AM3440-1X21-**G** | 1-channel X.21 plug-in card | |
| Loop-AM3440-1RS232-**G** | 1-channel RS232 plug-in card | |
| Loop-AM3440-1V35-**G** | 1-channel V.35 plug-in card | |
| Loop-AM3440-1E530-**G** | 1-channel EIA530 plug-in card | |
| Loop-AM3440-QEMA-**wr**-**m**-Tn-**x**-**G** | Jumper selectable: 2/4 WIRE; A/B side Quad E&M voice card, complied with IEEE1613 standard. | For AM3440-CHAK, CHB, CHC and CHCJ only<br>For **wr**, **m**, **n** and **x** option, please refer to the table below for detail information |
| Loop-AM3440-QMAGA- **G** | Quad channel magneto plug-in module with ring across L1&GND and L1&L2. Software programmable. | For AM3440-CHAK, CHB, CHC and CHCJ only.<br><br>Please use with 100-240Vac or ±48Vdc powered main units. |
| Loop-AM3440-QFXO-**x**-**G** | Quad FXO voice plug-in card | For AM3440-CHAK, CHB, CHC and CHCJ only<br><br>**GS** = Ground Start<br><br>**MP** = Metering Pulse Receive 12/16 KHz<br><br>For **x** option, please refer to the table below for detail information<br><br>QFXO-GM includes all QFXO card functions |
| Loop-AM3440-QFXO-M-**x**-**G** | Quad FXO with MP 16 KHz voice plug-in card | |
| Loop-AM3440-QFXO-M12-**x**-**G** | Quad FXO with MP 12 KHz voice plug-in card | |
| Loop-AM3440-QFXO-GS-**x**-**G** | Quad FXO with GS plug-in card | |
| Loop-AM3440-QFXO-GM-**x**-**G** | Quad FXO with GS and MP 16 KHz voice plug-in card | |
| Loop-AM3440-QFXO-GM12-**x**-**G** | Quad FXO with GS and MP 12 KHz voice plug-in card used with 4 RJ11 | |
| Loop-AM3440-QFXSA-**x**-**pt**-**G** | Quad FXSA voice card | For AM3440-CHAK, CHB, CHC and CHCJ only<br><br>Jumper setting options: Loop Start, Ground Start (GS), Metering Pulse Transmit 12/16 |
| Loop-AM3440-QFXSA-M-**x**-**pt**-**G** | Quad FXSA with MP 16KHz voice card | |

| Model | Description | Note |
|---|---|---|
| Loop-AM3440-QFXSA-M12-**x-pt-G** | Quad FXSA with MP 12KHz voice card | KHz (MP)<br><br>For **x** and **pt** options, please refer to the table below for detail information<br><br>Work with controller firmware v8.38.01 or up for software programmable signaling bits. |
| Loop-AM3440-QFXSA-GS-**x-pt-G** | Quad FXSA with GS | |
| Loop-AM3440-QFXSA-GM-**x-pt-G** | Quad FXSA with GS and MP 16KHz voice card | |
| Loop-AM3440-ECA-**G** | Echo canceller plug-in card | For AM3440-CHAK, CHB, CHC and CHCJ only |
| Loop-AM3440-ABRA-**G** | Analog voice bridging plug-in card | For AM3440-CHAK, CHB, CHC and CHCJ only |
| Loop-AM3440-M1C37-**LSFOM-G** | 1- channel C37.94 plug-in mini card | For AM3440-CHAK, CHB, CHC and CHCJ only<br><br>For **LSFOM** option, please refer to the table below for detail information |

***Single Slot Plug-in Module***

| Model | Description | Note |
|---|---|---|
| Loop-AM3440-8UDTEA-**opm**-**G** | 8-port universal data interface card that supports RS232/RS422/RS485 full-duplex DCE interface which is software configurable<br>Available option mode: Terminal Server, Omnibus, and Clock Pass Through | For **opm** option, please refer to the table below for detail information. |
| Loop-AM3440-3E1-**cc**-**G** | 3-channel E1 plug-in card with DS0 (64K bps) SNCP circuit level protection<br>Note: DS0 SNCP circuit level protection only support E1 frame mode | Order with L**oop-AM3440-CHAJ**-**G** or **Loop-AM3440-CHCJ**-**G** ONLY<br><br>For **cc** option, please refer to the table below for detail information<br><br>For controller hardware version **J** and software version **8.02.01** or newer versions. |
| Loop-AM3440-3T1-**G** | 3-channel T1 Interface | Order with **Loop-AM3440-CHAJ** or **Loop-AM3440-CHCJ** ONLY<br><br>For controller hardware version **J** and software version **8.38.01** or newer versions. |
| Loop-AM3440-TDMoEA-PPM-**G** | TDMoEA card with 2 GbE combo interfaces and 2 Ethernet interfaces (10/100/1000BaseT) plug-in module<br>Support G.823 Traffic<br>SFP optical module is not included. | For AM3440-CHA, AM3440-CHB, and AM3440-CHC only.<br><br>Please order separately for SFP optical modules from SFP optical brochure. |
| Loop-AM3440-4E1-**cc**-**G** | 4-channel E1 plug-in card | For **cc** option, please refer to the table below for detail information |
| Loop-AM3440-4T1-**G** | 4-channel T1 plug-in card | |
| Loop-AM3440-2GH-**G** | 2-channel G.SHDSL plug-in card (2 pair) | This card can be used in AM3440-A/B/C only. |
| Loop-AM3440-4GH-**G** | 4-channel G.SHDSL plug-in card (1 pair) | |
| Loop-AM3440-8CD-**G** | 8-channel G.703 plug-in card at 64 Kbps data rate | |
| Loop-AM3440-8DC-**G** | 8-channel dry contact type A plug-in card with maximum voltage 100 Vdc or 250 Vac | |
| Loop-AM3440-8DCB-**G** | 8-channel dry contact type B plug-in card with maximum voltage 220 Vdc or 250 Vac | |
| Loop-AM3440-1C37- **LSFOM –G** | 1- channel C37.94 plug-in card | For **LSFOM** option, please refer to the table below for detail information |
| Loop-AM3440-4C37- **LSFOM –G** | 4- channel C37.94 plug-in card | |

| | | |
|---|---|---|
| Loop-AM3440-ODP-**typ** | 8-channel OCU-DP plug-in card | For AM3440-CHA only.<br><br>Only **non-RoHS** compliant model available<br><br>**Limited Quantity** |
| Loop-AM3440-8RS232-RJ-**G** | 8-port RS232 plug-in card with X.50 subrate multiplexing scheme and X.54 encoding, with 8 RJ48 connectors for 8 RS232 Async ports | |
| Loop-AM3440-8RS232-DB-**G** | 8-port RS232 plug-in card with X.50 subrate multiplexing scheme and X.54 encoding, with 2 RJ48 connectors and 2 DB44 connectors for Async and Sync ports | Two conversion cables are included (DB44 connector to two DB25 and one DB9 connector; (Loop-ACC-CAB-DB44M-100-2DB25F-1DB09F-DB). |
| Loop-AM3440-6RS232A-RJ-**G** | 6-port RS232 card with V.110 encoding, with 6 RJ48 connectors for 6 RS232 Async ports | This card can be used in AM3440-A/B/C only. |
| Loop-AM3440-6RS232A-DB-**G** | 6-port RS232 card with V.110 encoding, with 2 DB44 connectors for Async and Sync ports | This card can be used in AM3440-A/B/C only.<br><br>Two conversion cables are included, DB44 connector to two DB25 and one DB9 connectors.<br><br>(Loop-ACC-CAB-DB44M-100-2DB25F-1DB09F-DB) |
| Loop-AM3440-8DBRA-RJ-**G** | 8-channel data bridge plug-in card, with 8 RJ48 connectors for 8 data bridge Async ports | |
| Loop-AM3440-8DBRA-DB-**G** | 8-channel data bridge plug-in card, with 2 RJ48 connectors and 2DB44 connectors for 8 data bridge Async ports | Two conversion cables are included (DB44 connector to two DB25 and one DB9 connector; (Loop-ACC-CAB-DB44M-100-2DB25F-1DB09F-DB). |
| Loop-AM3440-1FOMA-**opt**-**G** | 1FOMA Fiber Optical Interface with 1x9 optical port | For **opt** option, please refer to the table below for detail information<br>For controller hardware version **F** and software version **V8.15.01** or newer versions. |
| Loop-AM3440-RTB-**G** | 8-LAN ports/64 WAN ports router/bridge plug-in card | For controller hardware version **F** and software version **6.05.02** or newer versions. |
| Loop-AM3440-8EMA-**x-pt-typ**-**G** | 8-channel 2W/4W E&MA plug-in card | **pt** = power type<br>For **x, pt** and **typ** options, please refer to the table below for detail information |
| Loop-AM3440-12FXSA-**sn-pta-typ**-**G** | 12-channel FXSA plug-in card with 600/900 Impedance, Battery Reverse, Loop Start and PLAR. Without Ground Start and Metering Pulse. Used with 12 RJ11. | 12FXSA-GMP includes all FXS card functions<br><br>For **sn** option, please refer to the table below for detail information<br><br>**pta**= power type.<br><br>For **pta** option, please refer to the table below for detail information<br><br>The IEEE1613 standard applies to AM3440-A/C only<br><br>Please use with 100-240Vac or ±48Vdc |
| Loop-AM3440-12FXSA-P-**sn-pta-typ**-**G** | 12-channel FXSA plug-in card with 600/900 Impedance, Battery Reverse, Loop Start, PLAR and [PLAR bit programmable]. Without Ground Start and Metering Pulse.<br>Used with 12 RJ11. | |
| Loop-AM3440-12FXSA-M-**sn-pta-typ**-**G** | 12-channel FXSA plug-in card with 600/900 Impedance, Battery Reverse, Loop Start, PLAR and [Metering Pulse]. Used with 12 RJ11. | |

| | | |
|---|---|---|
| Loop-AM3440-12FXSA-MPP-**sn-pta-typ-G** | 12-channel FXSA plug-in card with 600/900 Impedance, Battery Reverse, Loop Start, PLAR, [PLAR bit programmable] and [Metering Pulse]. Used with 12 RJ11. | powered main units. |
| Loop-AM3440-12FXSA-GS-**sn-pta-typ-G** | 12-channel FXSA plug-in card with 600/900 Impedance, Battery Reverse, Loop Start, PLAR and [Ground Start]. Used with 12 RJ11. | 12FXSA-GMP includes all FXS card functions<br><br>**pta**= power type.<br><br>For **sn, pt, and typ** options, please refer to the table below for detail information.<br><br>The IEEE1613 standard applies to AM3440-A/C only<br><br>Please use with 100-240Vac or ±48Vdc powered main units. |
| Loop-AM3440-12FXSA-GM-**sn-pta-typ-G** | 12-channel FXSA plug-in card with 600/900 Impedance, Battery Reverse, Loop Start, PLAR, [Ground Start] and [Metering Pulse]. Used with 12 RJ11. | |
| Loop-AM3440-12FXSA-GMP-**sn-pta-typ-G** | 12-channel FXSA plug-in card with 600/900 Impedance, Battery Reverse, Loop Start, PLAR, [PLAR bit programmable], [Ground Start] and [Metering Pulse]. Used with 12 RJ11. | |
| Loop-AM3440-12FXOA-**typ-G** | 12-channel FXOA plug-in card with 600/900 Impedance, Battery Reverse and Loop Start. Without Ground Start and Metering Pulse. Used with 12 RJ11. | 12FXOA-GM includes all FXO card functions<br><br>For **typ** option, please refer to the table below for detail information.<br><br>Please use with 100-240Vac or ±48Vdc powered main units. |
| Loop-AM3440-12FXOA-M-**typ-G** | 12-channel FXOA plug-in card with 600/900 Impedance, Battery Reverse, Loop Start and [Metering Pulse]. Used with 12 RJ11. | |
| Loop-AM3440-12FXOA-GS-**typ-G** | 12-channel FXOA plug-in card with 600/900 Impedance, Battery Reverse, Loop Start and [Ground Start]. Used with 12 RJ11. | |
| Loop-AM3440-12FXOA-GM-**typ-G** | 12-channel FXOA plug-in card with 600/900 Impedance, Battery Reverse, Loop Start, [Ground Start] and [Metering Pulse]. Used with 12 RJ11. | |
| Loop-AM3440-12MAGA-**typ-G** | 12-channel Magneto plug-in module with ring across L1&GND and L1&L2. Software programmable. | Please use with 100-240Vac or ±48Vdc powered main units.<br><br>For **typ** option, please refer to the table below for detail information |
| Loop-AM3440-VoIPGA-**pt-G** | VoIP Gateway card with 1 WAN and 2 LAN 10/100Base-T interfaces. Supports up to 60 voice channels.<br><br>Support G.711 a/mμ-law, G.726-32K, G.729 and G.723.1 voice compression formats<br><br>SIP compliant. | For AM3440-A/B/C<br><br>For AM3440-CCB controller only<br><br>For the **pt** option, please refer to the table below for details |

| | | |
|---|---|---|
| Loop-AM3440-6UDTEA-**G** | 6-port universal data interface card that supports three software configurable modes:<br><br>Port 1 to 4: two DB44 connectors<br><br>Port 5 to 6: two RJ48 connectors<br><br>Mode 1:<br><br>Port 1 to 4: RS232/RS422/X.21, Async/Sync 64kbps and subrate with V.110 encoding<br><br>Port 5 to 6: RS232 for ASYNC only<br><br>Mode 2:<br><br>Port 1 to 4: X.21/RS422 SYNC N*64k (N=1~32)<br><br>Port 5 to 6: Disabled<br><br>Mode 3:<br><br>Port 1 to 3: X.21/RS422 SYNC N*64k, (N=1~32).<br><br>Port 4: X.21/RS422 SYNC, N*64k, (N=1~20).<br><br>Port 5 to 6: RS232 N*64k (N=1~6) oversampling for ASYNC data.<br><br>Mode 4:<br><br>Port 1 to 4: RS232/RS422/X.21/V.35/V.36/EIA530 SYNC 38.4K and subrate<br><br>Port 5 to 6: Disabled<br><br>Mode 5:<br><br>Port 1 to 4: X.21/RS449/RS422/RS232/V.35/V.36/EIA530 SYNC N*64k (N=1~32)<br>Port 5 to 6: Disabled | No conversion cable is included. Please order conversion cable separately from below table.<br><br>Six conversion cable types are available:<br>- Loop-ACC-CAB-DB44M-100-2DB25F-VB<br>- Loop-ACC-CAB-DB44M-100-2DB15F-VB<br>- Loop-ACC-CAB-DB44M-100-1DB15F-1DB25F-VB<br>- Loop-ACC-CAB-DB44M-100-2M34F-VB<br>- Loop-ACC-CAB-DB44M-100-2DB37F-VB<br>- Loop-ACC-CAB-DB44M-100-1DB37F-1M34F-VB |
| Loop-AM3440-6CDA-cdm-**G** | 6-channel G.703 Interface at 64 Kbps data rate. Per port configurable for Co-directional or Contra-directional interfaces. | For **cdm** option, please refer to the table below for detail information. |

***Dual Slot Plug-in Module***

| Model | Description | Note |
|---|---|---|
| Loop-AM3440-TTA-**pwr**-**G** | Dual slot transfer trip plug-in module for AM3440-A/B/C. Four ports for DTT input and output. | Used in Loop-AM3440-A/B/C Chassis<br><br>For **pwr** option, please refer to the table below for detail information. |

## *Accessories*

| Model | Description | Note |
|---|---|---|
| **Power Module** | | |
| Loop-AM3440-SD125-**G** | Single -125 Vdc (-40 to -150 Vdc) Power Module (100W) for AM3440-A only | For AM3440-CHA only<br><br>For shared redundancy, order 2 single DC<br><br>If the user orders 100W power module, the maximum number of cards allowed in slot 1 to 12 is:<br>• Four 12-channel FXSA<br>• Nine 12-channel Magneto<br>• Eleven 8-channel 2W/4W E&M<br>• Six 8-channel OCU-DP<br>• Two 24-channel FXSA<br><br>There are no limitations for other plug-in cards in slot 1 to 12.<br><br>There are no limitations for any plug-in cards in slot A to D. |
| Loop-AM3440-SDA-**G** | Single -24Vdc/-48Vdc (-18 to –75 Vdc) power module (150W) for AM3440-A only | For AM3440-CHA only |
| Loop-AM3440-SDB-**G** | Single -48 Vdc (-36 to -75 Vdc) Power Module (100W) for AM3440-B/C | For AM3440-CHB/CHC/CHCJ<br><br>For shared redundancy, order 2 single DC. |
| Loop-AM3440-SAB-**G** | Single AC plug-in power supply (100 to 240 Vac, 50/60 Hz) for AM3440-B/C | For AC, no redundancy<br>Choose an appropriate power cord |
| **Mounting Ear** | | |
| 19”/23” ear mounts | A pair of 19”/23” ear mounts is supplied as part of standard package. | For other sizes, please contact your nearest Loop sales representative. |
| **User’s Manual** | | |
| Loop-AM3440-UM | User’s Manual (optional, paper copy).<br>A CD version of the manual is already included as standard equipment. | For AM3440-A CCB controller. |
| Loop-AM3440-UMB | User’s Manual (optional, paper copy).<br>A CD version of the manual is already included as standard equipment. | For AM3440-B CCB controller. |
| Loop-AM3440-UMC | User’s Manual (optional, paper copy).<br>A CD version of the manual is already included as standard equipment. | For AM3440-C CCB controller. |
| Loop-AM3440-UMP | User’s Manual (optional, paper copy).<br>A CD version of the manual is already included as standard equipment. | For AM3440-A/B/C/D CCPA controller. |
| **Power Cord** | | |
| Loop-ACC-PC-USA-**G** | AC power cord for Taiwan/America | |
| Loop-ACC-PC-EU-**G** | AC power cord for Europe | |
| Loop-ACC-PC-UK-**G** | AC power cord for UK | |
| Loop-ACC-PC-AUS-**G** | AC power cord for Australia | |
| Loop-ACC-PC-CH-**G** | AC power cord for China | |
| **Power Adaptor** | | |
| Loop-ACC-APA-240-**G** | 240 Watt, AC (3.6A, auto sensing) to DC (+48 Vdc, 5A) adaptor for USA | |
| Loop-ACC-APE-240-**G** | 240 Watt, AC (3.6A , auto sensing) to DC (+48 Vdc, 5A) adaptor for Europe | |
| Loop-ACC-APU-240-**G** | 240 Watt, AC (3.6A, auto sensing) to DC (+48 Vdc, 5A) adaptor for UK | |
| **Fan Tray** | | |

| | | |
|---|---|---|
| Loop-AM3440-FAN-**G** | Fan tray | For AM3440-A only<br><br>Power supplied from rear of chassis. |
| **Air Flow Guide Rack & Cable Management** | | |
| Loop-AM3440-CMA-**G** | Cable Management for AM3440, 1U (44mm) with 10cm ring | For AM3440-CHA, CHB, CHC, CHCJ, CHD |
| **External LCD** | | |
| Loop-AM3440-LCDB-**G** | External LCD and Keypad. Works with a CCB CPU Card. | Only cover selected plug-in cards, contact your nearest Loop sales representative for details. (For CCB controller only). |
| **FXO Box** | | |
| Loop-AM3440-FXO BOX | Support FXO Interface Battery Feed | Non-RoHS compliant |
| **Conversion Cables (All conversion cables are RoHS compliant)** | | |
| **Model** | **Description** | **Note** |
| Loop-ACC-CAB-HDB15M-25-DB09F-**G** | DB15/Male to DB9/Female cable; Length: 25 cm | For CCB controller Console/LCD interface connection. |
| Loop-ACC-CAB-HDB15M-100-RJ48M-**G** | DB15/Male to RJ48/Male cable; Length: 100 cm | For CCPA controller Clock interface connection, including external clock, PPS*, and ToD* |
| Loop-ACC-CAB-DB25M-100-8BNCM-**G** | DB25/Male to eight BNC/Male cable; Length: 100 cm | Used in Loop-AM3440-M4E75-**G** plug-in card |
| Loop-ACC-CAB-DB25M-100-8BNCF-**G** | DB25/Male to eight BNC/Female cable; Length: 100 cm | Used in Loop-AM3440-M4E75-**G** plug-in card |
| Loop-ACC-CAB-DB25M-300-8BNCM-**G** | DB25/Male to eight BNC/Male cable; Length: 300 cm | Used in Loop-AM3440-M4E75-**G** plug-in card |
| Loop-ACC-CAB-DB25M-300-8BNCF-**G** | DB25/Male to eight BNC/Female cable; Length: 300 cm | Used in Loop-AM3440-M4E75-**G** plug-in card |
| Loop-ACC-CAB-DB25M-100-4RJ48M-**G** | DB25/Male to four RJ48C/Male cable; Length: 100 cm | Used in Loop-AM3440-M4E120-**G** plug-in card |
| Loop-ACC-CAB-DB25M-300-4RJ48M-**G** | DB25/Male to four RJ48C/Male cable; Length: 300 cm | Used in Loop-AM3440-M4E120-**G** plug-in card |
| Loop-ACC-CAB-DB44M-100-2DB25F-1DB09F-DB-**G** | DSUB-44 pin/Male to two DSUB-25 pin/Female- one DSBU-9 pin/Female (8P8C) plug, Length:100cm | Used in Loop-AM3440-8RS232-DB-**G**, Loop-AM3440-8DBRA-DB-**G**, and Loop-AM3440-6RS232A-DB-**G** plug-in card |
| Loop-ACC-CAB-DB44M-100-2DB25F-1DB09F-TS-**G** | DSUB-44 pin/Male to two DSUB-25 pin/Female- one DSBU-9 pin/Female (8P8C) plug, Length:100cm | Used in Loop-AM3440-TS-**G** plug-in card |
| Loop-ACC-CAB-DB25M-30-1M34F-**G** | DSUB-25pin/Male to M34/Female V.35 Conversion cable<br>Length: 30 cm | Used in Loop-AM3440-1V35-**G** plug-in card |
| Loop-ACC-CAB-DB44M-100-2DB25F-VB-**G** | DSUB-44 pin/Male to two DSUB-25 pin/Female plug, Length:100cm | Used in V.35 and RS232 interfaces. |
| Loop-ACC-CAB-DB44M-100-2DB15F-VB-**G** | DSUB-44 pin/Male to two DSUB-15 pin/Female plug, Length:100cm | Used in X.21 interface. |
| Loop-ACC-CAB-DB44M-100-1DB15F-1DB25F-VB-**G** | DSUB-44 pin/Male to one DSUB-15 pin/Female plug + one DSUB-25 pin/Female plug, Length:100cm | Used in RS232, V.35 and X.21 interfaces. |
| Loop-ACC-CAB-DB44M-100-2M34F-VB-**G** | DSUB-44 pin/Male to two M34 pin/Female plug, Length:100cm | Used in V.35 interface. |
| Loop-ACC-CAB-DB44M-100-<br><br>2DB37F-VB-**G** | DSUB-44 pin/Male to two DSUB-37 pin/Female plug, Length:100cm | Used in EIA530/RS449 and RS422 interfaces. |
| Loop-ACC-CAB-DB44M-100-1DB37F-1M34F-VB-**G** | DSUB-44 pin/Male to one DSUB-37 pin/Female plug + one M34 pin/Female plug, Length:100cm | Used in V.35, EIA530/RS449 and RS422 interfaces. |
| Loop-ACC-CAB-1SCM-200-1LCF-**G** | One SC/Male to one LC/Female fiber optic adaptor cable. Length: 200 cm | Used with Loop-AM3440-4C37-**T**-**G**<br>and Loop-AM3440-1C37-**T**-**G** |

*Future option

| | | |
|---|---|---|
| **Y-Box (All Y-Box are RoHS compliant)** | | |
| Loop-VV-B-**G** | 1 for 1 protection Y-Box with BNC connectors (4-E1) | Used with 4E1 |
| Loop-VV-R-**G** | 1 for 1 protection Y-Box with RJ48C connectors (16-E1) | Used with 4E1 |
| Loop-VV-T-**G** | 1 for 1 protection Y-Box with RJ48C connectors (16-T1) | Used with 4T1 |
| **Blank Panels(All blank panels are RoHS compliant)** | | |
| 30.000333.A00-**G** | Blank Panel for Power Supply Slot (flat) | For AM3440-A only |
| 30.001257.A00-**G** | Blank Panel for Power Supply Slot (flat) | For use in AM3440-B/C |
| 30.000349.A00-**G** | Blank Panel for Controller Slot (flat) | For use in AM3440-A/B/C chassis |
| 30.000335.A00-**G** | Blank Panel for mini Slot A-D (flat) | For use in AM3440-A/B/C chassis |
| 30.000331.A00-**G** | Blank Panel for Slot 1-12 (flat) | For use in AM3440-A/B/C chassis |
| 30.001028.A00-**G** | Blank Panel for Power Slot (u-shape) | For AM3440-A only |
| 30.001029.A00-**G** | Blank Panel for Controller (u-shape) | For use in AM3440-A/B/C chassis |
| 30.001030.A00-**G** | Blank Panel for mini Slot A-D (u-shape) | For use in AM3440-A/B/C chassis |
| 30.001027.A00-**G** | Blank Panel for Slot 1-12 (u-shape) | For use in AM3440-A/B/C chassis |

| |
|---|
| **SFP Optical Modules** |
| Please place your order using the 5-digit alphanumeric codes listed in the separate SFP Optical Module Brochure. |

| | | |
|---|---|---|
| **Feature Activation License** | | |
| Loop-AM3440-ERING | Feature Activation License for AM3440 CPU card to support framed E1 PDH-Ring function | Used with 4E1, M4E75, M4E120 and FOM |
| Loop-AM3440-TRING | Feature Activation License for AM3440 CPU card to support framed T1 PDH-Ring function | Used with 4T1 |
| Loop-AM3440-LCT | Feature Activation License for AM3440 CPU card to support LCT Graphical Configuration Software | Used with Loop-LCT Software |
| Loop-AM3440-CCPA-PW * | Feature Activation License for AM3440 CCPA controller to support TDMoE uplink. | Used with AM3440-CCPA-NPW controller. |

**For 4E1 and 3E1 cards**

■ Where **cc** is used to select connector:

| cc = | Description | Note |
|---|---|---|
| **RJ** | RJ48C connector | |
| **BNC** | BNC connector | |

**For FOM and 1FOMA card**

■ Where **opt** is used to select optical module type (All optical modules are RoHS compliant):

| opt = | Description | Note |
|---|---|---|
| **SAA** | Single optical module with dual uni-directional fiber, 1310 nm, SC optical connector, 30 km ***- S1.1*** | Use dual fiber<br>Units delivered ITU-T G.957 application code |
| **SBB** | Single optical module with dual uni-directional fiber, 1310 nm, SC optical connector, 50 km ***– L1.1*** | |
| **SCC** | Single optical module with dual uni-directional fiber, 1310 nm, FC optical connector, 30 km ***– S1.1*** | |
| **SDD** | Single optical module with dual uni-directional fiber, 1550 nm, SC optical connector, 20 km ***– S1.2*** | |
| **SEE** | Single optical module with dual uni-directional fiber, 1550 nm, SC optical connector, 100 km ***– L1.2*** | |
| **SSM** | Single optical module with single bi-directional fiber (master), 1310 nm transmit and 1550 receive, SC optical connector, 30 km ***– S1.1/ S1.2*** | 1310 nm from master to slave<br>Order **SSM** to use with **SSS**<br>Use 1 fiber<br>ITU-T G.957 application code |

| | | |
|---|---|---|
| **SSS** | Single optical module with single bi-directional fiber (slave), 1310 nm receive and 1550 transmit, SC optical connector, 30 km ***- S1.1/ S1.2*** | 1550 nm from slave to master<br>Order **SSS** to use with **SSM**<br>Use 1 fiber<br>ITU-T G.957 application code |

**Note:** For other special optical modules, please contact your nearest Loop sales representative.

**For 8UDTEA card**

■ Where **opm** is to select 8UDTEA functions:

| **opm** | **Description** |
|---|---|
| DCE | Support RS232/RS422/RS485 DCE interface which is software configurable |
| TS | Support Terminal Server Function and DCE |
| OMNI | Support Omnibus Function and DCE |
| CPT | Support Clock Pass Through function and DCE |
| TSOMNI | Support Terminal Server, Omnibus Function and DCE |
| HD | Support RS232/RS422/RS485 DCE interface with Full- and Half-Duplex modes |
| TSHD | Support Terminal Server Function and DCE with Full- and Half-Duplex modes |
| OMNIHD | Support Omnibus Function and DCE with Full- and Half-Duplex modes |
| TSOMNIHD | Support Terminal Server, Omnibus Function and DCE with Full- and Half-Duplex modes |
| FULL | Support Terminal Server, Omnibus Function, Clock Pass Through and DCE with Full- and Half-Duplex modes |
| **Feature Activation License** | **Description** |
| Loop-AM3440-8UDTEA-UPGR-TS | Feature Activation License for AM3440 8UDTE card to support Terminal Server function |
| Loop-AM3440-8UDTEA-UPGR- OMNI | Feature Activation License for AM3440 8UDTE card to support Omnibus function |
| Loop-AM3440-8UDTEA-UPGR-CPT | Feature Activation License for AM3440 8UDTE card to support Clock Pass Through function |
| Loop-AM3440-8UDTEA-UPGR-TSOMNI | Feature Activation License for AM3440 8UDTE card to support Terminal Server function and Omnibus function |
| Loop-AM3440-8UDTEA-UPGR-HD | Feature Activation License for AM3440 8UDTE card to support Full- and Half-Duplex modes |
| Loop-AM3440-8UDTEA-UPGR-TSHD | Feature Activation License for AM3440 8UDTE card to support Terminal Server function with Full- and Half-Duplex modes |
| Loop-AM3440-8UDTEA-UPGR-OMNIHD | Feature Activation License for AM3440 8UDTE card to support Omnibus function with Full- and Half-Duplex modes |
| Loop-AM3440-8UDTEA-UPGR-TSOMNIHD | Feature Activation License for AM3440 8UDTE card to support Terminal Server function and Omnibus function with Full- and Half-Duplex modes |
| Loop-AM3440-8UDTEA-UPGR-FULL | Feature Activation License for AM3440 8UDTE card to support Terminal Server,<br>Omnibus and Clock Pass Through functions with Full- and Half-Duplex modes |

**For Quad E&M A card:**

■ Where **wr** is used to select wire type:

| **wr** = | **Description** | **Note** |
|---|---|---|
| **2w** | 2 wire | |
| **4w** | 4 wire | |

■ Where **m** is used to select QEM card signaling side (must select one):

| **m** = | **Description** | **Note** |
|---|---|---|
| **B** | B (carrier side) connects to A side. | |
| **A** | A (exchange side) connects to B side. A side M lead to B side M lead, A side E lead to B side E lead. | |

■ Where **n** is used to select QEM card signaling type (must select one):

| **n** = | **Description** | **Note** |
|---|---|---|
| **O** | For voice transmission only. | Circuit Type doesn't matter. |
| **1** | Type I (Original) E&M Signaling Circuit | M lead provides discharge for the A side. |

| | | |
|---|---|---|
| **2** | Type II Circuit. This design attempts to reduce ground noise by adding two leads: SB (Signal to Battery) and SG (Signal to Ground) | Reduced ground noise. Ground current is eliminated at the cost of two more wires per circuit. |
| **3** | Type III Circuit. The SG lead serves as a discharge for the M lead. Reduces delay caused by combination of (a) low current electronic detectors, and (b) long runs of the E and M leads. | Type III is rare because ground currents on the E return would cause noise |
| **4** | Type IV Circuit. Based on the Type 2 circuit. This E&M circuit provides symmetry. | |
| **5** | Type V Circuit. For applications where ground noise is not an issue. Based on the Type 2 circuit. | |

**For voice card (8EMA, QFXO, QEMA, and QFXSA):**

■ Where **x** is used to select all of voice card signaling bits. If this option is not required, omit the **x** field in the ordering code.

| | **x =** | **Description** | **Note** |
|---|---|---|---|
| **8EMA** | **E** | Follows ETSI signaling bits | |
| | **A** | Follows ANSI signaling bits | Jumper selectable for all channels |
| | **R** | Reverse for ON-HOOK and OFF-HOOK signaling bits exchange | |
| | **AR** | Follows ANSI signaling bits and reverse bit | |
| | **S** | Follows customer's special bit or function assignment | |
| | **S4** | Disable the function of the test button | |
| | **S5** | Forcing all ports to be OFF-HOOK when an alarm occurs | |
| | **S6** | Forcing all ports to be ON-HOOK when an alarm occurs | |
| **QFXO** | **x =** | **Description** | **Note** |
| | **A** | Follows ANSI signaling bits | |
| | **E** | Follows ETSI signaling bits | |
| | **S** | Follows customer's special bits assignment | |
| | **T** | Trunk condition OFF-HOOK | |
| | **AT** | Follows ANSI signaling bits w/ trunk condition OFF-HOOK | |
| | **ST** | Follows customer's special bits assignment w/ trunk condition OFF-HOOK | |
| **QEMA** | **x =** | **Description** | **Note** |
| | **A** | Follows ANSI signaling bits | Jumper selectable for all channels. |
| | **E** | Follows ETSI signaling bits | |
| | **S** | Follows customer's special bits assignments | |
| **QFXSA** | **x =** | **Description** | **Note** |
| | **A** | Follows ANSI signaling bits | ■This option applies to controller version v8.36.XX and before. |
| | **E** | Follows ETSI signaling bits | |
| | **S** | Follows customer's special bits assignment | ■If this option is not required, omit the **x** field in the ordering code. |

**Note:**

1. For S (customer's special bit), please contact your nearest Loop sales representative.
2. If x is not selected from table above, the default setting for signaling bits is ETSI and for trunk condition is ON-HOOK.

**For 8EMA card:**

■ Where **pt** is used to select the following functions:

| **pt=** | **Description** | **Note** |
|---|---|---|
| **24** | For AM3440-A type chassis using SDA power module with ±24Vdc input power | |
| **PWR** | For AM3440-A type chassis using SDA power module with ±48Vdc input power, or AM3440-A type chassis using SD125 power module with ±125Vdc input power or AM3440-B/C type chassis using SDB power module with ±48Vdc input power, or AM3440-B/C type chassis using SAB power module with 100 to 240Vdc input power. | |
| **PWRIE1613** | For AM3440-A type chassis using SDA power module with ±48Vdc input power, | |

| | | |
|---|---|---|
| | compiled with IEEE1613 standard<br>For AM3440-C type chassis using SDA power module with ±48Vdc input power, compiled with IEEE1613 standard | |

■ Where **typ** is used to select the connector type:

| typ= | Description | Note |
|---|---|---|
| **RJ** | 8 x RJ45 | |
| **TELCO** | 1 x Telco 64 Connector | |

**For 12-channel FXSA card:**

■ Where **sn** is used to select special function. If this option is not required, omit the **sn** field in the ordering code.

| sn = | Description | Note |
|---|---|---|
| **sn = omit** | FXS Loop Feed = -48 Vdc with 25 mA current limit; alarm tone enable; normal ring | |
| **S1** | FXS Loop Feed = -48 Vdc with 35 mA current limit | |
| **S4** | Remove alarm tone | |
| **S5** | Double ring tone transmit | |

**Note:** For sn (special function), please contact your nearest Loop sales representative.

■ Where **pta** is used to select the following functions.

| pta= | Description | Note |
|---|---|---|
| **24** | For AM3440-A type chassis using SDA power module with ±24Vdc input power | |
| **PWR** | For AM3440-A with ±48Vdc (SD, SDA, or SD125)<br>For AM3440-B/C with ±48Vdc (SDB) and AC (SAB) power modules | |
| **PWRIE1613** | For AM3440-A with ±48Vdc (SDA) power complied with IEEE1613 standard<br>For AM3440-C with ±48Vdc (SDB) power complied with IEEE1613 standard | |

■ Where **typ** is used to select the connector type:

| typ= | Description | Note |
|---|---|---|
| **RJ** | 8 x RJ45 | |
| **TELCO** | 1 x Telco 64 Connector | |

**For 12FXOA/12MAGA**

■ Where **typ** is used to select the connector type:

| typ= | Description | Note |
|---|---|---|
| **RJ** | 12 x RJ11 | |
| **TELCO** | 1 x Telco 64 Connector | |

**For ODP**

■ Where **typ** is used to select the connector type:

| typ= | Description | Note |
|---|---|---|
| **RJ** | 8 x RJ45 | |
| **TELCO** | 1 x Telco 64 Connector | |

**For QFXSA card:**

■ Where **pt** is used to select the following functions.

| pt= | Description | Note |
|---|---|---|
| **24** | For AM3440-A type chassis using SDA power module with ±24Vdc input power | For AM3440-CHAK /CHB/CHC/CHCJ only |
| **PWR** | For AM3440-A with ±48Vdc (SD, SDA, or SD125)<br>For AM3440-B/C with ±48Vdc (SDB) and AC (SAB) power modules | |

| | | |
|---|---|---|
| **PWRIE1613** | For AM3440-A with ±48Vdc (SDA) power complied with IEEE1613 standard<br>For AM3440-C with ±48Vdc (SDB) power complied with IEEE1613 standard | |
| **24IE1613** | For AM3440-A with ±24Vdc (SDA) power complied with IEEE1613 standard. | |

**For C37.94 Card:**

■ Where **LSFOM** is to select **LS-F**iber **O**ptical **M**odule option, please replace **LSFOM** with your selection.

| **LSFOM** | **Description** | | | | | | | | | | **Note** |
|---|---|---|---|---|---|---|---|---|---|---|---|
| **Code** | **Mode** | | **Data Rate** | | **Wave Length** | | **Distance** | | **Connector** | | |
| | **Code** | **Description** | **Code** | **Description** | **Code** | **Description** | **Code** | **Description** | **Code** | **Description** | |
| **ZHHTT** | Z | Multi-mode | H | 155 M | H | 820nm | T | 2km | T | ST connector | 1 * 8<br>Separate transceiver & receiver |
| **QHATT** | Q | Multi-mode | H | 155 M | A | 850nm | T | 2km | T | ST connector | 1 * 9 |
| **NFB3T** | N | Single mode | F | 125 M | B | 1310nm | 3 | 30km | T | ST connector | |
| **QFBTT** | Q | Multi-mode | F | 125 M | B | 1310nm | T | 2km | T | ST connector | |
| **NHC2S** | N | Single mode | H | 155 M | C | 1550nm | 2 | 20km | S | SC connector | |
| **T** | Single mode, 1310nm, Tx_min -13dBm, Rx_max -30dBm, SC type connector.<br>Works with Toshiba teleprotection device | | | | | | | | | | Must use 3*DS0 |
| **S** | Single mode,1310nm, Tx_min -14dBm, Rx_max -36dBm, ST type connector<br>Works with SEL teleprotection device | | | | | | | | | | Must use 8*DS0 |

**For mini C37.94 Card:**

■ Where **LSFOM** is to select **LS-F**iber **O**ptical **M**odule option, please replace **LSFOM** with your selection.

| **LSFOM** | **Description** | | | | | | | | | | **Note** |
|---|---|---|---|---|---|---|---|---|---|---|---|
| **Code** | **Mode** | | **Data Rate** | | **Wave Length** | | **Distance** | | **Connector** | | |
| | **Code** | **Description** | **Code** | **Description** | **Code** | **Description** | **Code** | **Description** | **Code** | **Description** | |
| **ZHHTT** | Z | Multi-mode | H | 155 M | H | 820nm | T | 2km | T | ST connector | 1 * 8<br>Separate transceiver & receiver |
| **QHATT** | Q | Multi-mode | H | 155 M | A | 850nm | T | 2km | T | ST connector | 1 * 9 |
| **NFB3T** | N | Single mode | F | 125 M | B | 1310nm | 3 | 30km | T | ST connector | |
| **QFBTT** | Q | Multi-mode | F | 125 M | B | 1310nm | T | 2km | T | ST connector | |
| **NHC2S** | N | Single mode | H | 155 M | C | 1550nm | 2 | 20km | S | SC connector | |

**For Transfer Trip (TTA) Card:**

■ Where **pwr** is used to select the following functions.

| **pwr=** | **Description** | **Note** |
|---|---|---|

| pwr= | Description | Note |
|---|---|---|
| **24*** | Complied with 24/48V voltage | |
| **48** | Complied with 48/125V voltage | |
| **125*** | Complied with 125/250V voltage | |

*Future option

**For 6CDA Card:**

■ Where **cdm** is used for co-directional/contra-directional mode selection. Must select one from table below.

| cdm= | Description | Note |
|---|---|---|
| **cc** | Supports G.703 Contra-directional controlling (DCE) and Co-directional interface configuration | |
| **cs** | Supports G.703 Contra-directional subordinate (DTE) and Co-directional interface configuration | |
| **mixed** | Supports G.703 Contra-directional controlling (DCE), Contra-directional subordinate (DTE) and Co-directional interface configuration | |

**For TDMoE/TDMoEA:**

**SFP Optical/Electrical Module Plug-in option, please go to SFP Optical Module Brochure for detail.**

**For VOIPGA**

■ Where **pt** is used to select the power type:

| pt= | Description | Note |
|---|---|---|
| **PWR** | For AM3440-A with -48Vdc (SDA) power module<br>For AM3440-B/C with -48Vdc (SDB) power module | For AM3440-CHAK/CHB/CHC/CHCJ |

## Ordering Examples

**Example 1:**

**Loop-AM3440-CHAK, Loop-AM3440-CCB, Loop-AM3440-SDA, Loop-AM3440-4E1-RJ, Loop-AM3440-8RS232:**

For AM3440-A type chassis with a CPU card (E1 external clock), a single -48 Vdc 150W power module, 4-channel E1 interface with RJ48C connectors, one 8RS232 plug-in module and fan tray.

**Example 2:**

**Loop-AM3440-CHB, Loop-AM3440-CCB, Loop-AM3440-SDB, Loop-AM3440-M4E75, Loop-AM3440-8CD:**

For AM3440-B type chassis with a CPU card (E1 external clock), a single -48 Vdc 100W power module, one Mini Quad E1 interface with 75 ohm and one 8-channel G.703 interface at 64 Kbps data rate.

**Example 3:**

**Loop-AM3440-CHCJ, Loop-AM3440-CCB, Loop-AM3440-SDB, Loop-AM3440-M4E120, Loop-AM3440-2GH:**

For AM3440-C type chassis with a CPU card (E1 external clock), a single -48 Vdc 100W power module, one Mini Quad E1 interface with 120 ohm and one 2-channel G.SHDSL plug-in module (2 pair).

# Loop-AM3440 Access DCS-MUX Product Specifications

| | |
|---|---|
| ***CCPA Controller on-board Combo Gigabit Ethernet (GbE) Interface for TDMoE Services*** | |
| Number of Ports | 2 |
| Speed | 10/100/1000M bps |
| Connector | RJ45 for twisted pair GbE, LC for optical GbE, auto detection |
| *Ethernet Function* | |
| Basic Features | MDI/MDIX for 10/100/1000M BaseT auto-sensing<br>Ping function contained ARP |
| *Pseudowire* | |
| Concurrent PW | Up to 64 |
| Encapsulation Format | SAToP (CCPA T1 SAToP*), CESoPSN, MEF-8 (CESoETH) |
| QoS | User configurable 802.1p CoS, ToS in out-going IP frame |
| *Clock Source* | Internal, Line Interface, External (E1/T1/2048 KHz), Adaptive Clock Recovery for Pseudowires, SyncE |
| *Alarm Relay* | Max. Current: 1A for 24VDC, 0.625A for 48VDC<br>Fuse alarm, performance alarm |
| *Management* | |
| Console | Micro USB Connector<br>User Interface: Menu driven VT-100 |
| Ethernet | 2 Combo GE port, Connector: RJ45 & SFP<br>SNMPv1/v3, Telnet/SSH, support Radius client function |
| Inband Management | Inband 64 Kbps, support HDLC/PPP |
| *System Configuration Parameters* | Active Configuration, Stored Configuration, and Default Configuration (Stored in Non-volatile Memory) |
| *Performance Monitor* | |
| Performance Registers | Last 24 hours performance in 15 minute intervals and last 7 days in 24 hour summaries |
| Separate Registers | Network, user, and remote site |
| Performance Reports | Reports include E1 Bursty Errored Second, Severe Errored Second, Degraded Minutes. Also available in Statistics (%) |
| Alarm Queue | To record the latest alarm type, location, date and time |
| Threshold | Bursty Seconds, Severely Errored Second, Degraded Minutes |
| *Diagnostics* | |
| Loopback | E1/T1 interface (Line Loopback, Payload Loopback, Local Loopback), DTE Loopback (DTE-to-DTE, DTE to Line) |
| Test Pattern | For Controller: $2^{20}$-1, $2^{15}$-1, $2^{11}$-1, $2^{9}$-1, and 4-byte user define pattern |
| *Front Panel* | |
| Controller LED Indicators | Power, ACTIVE, ALARM |

* Future Option

### CCB Controller

| | |
|---|---|
| *Clock Source* | Internal, Line Interface, External (E1/T1/2048 KHz), Adaptive Clock Recovery for Pseudowires (with TDMoEA module), SyncE |
| *Alarm Relay* | Max. Current: 1A for 24VDC, 0.625A for 48VDC<br>Fuse alarm, performance alarm |
| *Management* | |
| Console | Electrical: RS232; Connector: HB15, female (with HB15-to-DB9 adaptor)<br>Micro USB<br>User Interface: Menu driven VT-100 |
| Ethernet | 1 Combo GE port, Connector: RJ45 & SFP<br>SNMPv1/v3, Telnet/SSH |
| Inband Management | Inband 64 Kbps, support HDLC/PPP |
| *System Configuration Parameters* | Active Configuration, Stored Configuration, and Default Configuration (Stored in Non-volatile Memory) |
| *Performance Monitor* | |
| Performance Registers | Last 24 hours performance in 15 minute intervals and last 7 days in 24 hour summaries |
| Separate Registers | Network, user, and remote site |
| Performance Reports | Reports include E1 Bursty Errored Second, Severe Errored Second, Degraded Minutes. Also available in Statistics (%) |
| Alarm Queue | To record the latest alarm type, location, date and time |
| Threshold | Bursty Seconds, Severely Errored Second, Degraded Minutes |
| *Diagnostics* | |
| Loopback | E1/T1 interface (Line Loopback, Payload Loopback, Local Loopback), DTE Loopback (DTE-to-DTE, DTE to Line) |
| Test Pattern | For Controller: $2^{20}$-1, $2^{15}$-1, $2^{11}$-1, $2^{9}$-1, and 4-byte user define pattern |
| *Front Panel* | |
| Controller LED Indicators | Power, ACTIVE, ALARM<br>A, B, C, D slots: Multi-Color LED indication |

### Physical /Electrical

| Model | AM3440-A | | AM3440-B | | AM3440-C | |
|---|---|---|---|---|---|---|
| Dimensions | 432.4 x 220 x 223.5 mm (W×H×D) | | 438 x 110 x 224 mm (W×H×D) | | 438 x 132 x 224 mm (W×H×D) | |
| Power | Single/ Dual -48 Vdc: -36 to -75 Vdc, 100 Watts max.<br>Single/ Dual -48 Vdc: -36 to -75 Vdc, 150 Watts max.<br>Single/ Dual -24 Vdc: -18 to -36 Vdc, 150 Watts max<br>Single/ Dual -125 Vdc: -40 to -150 Vdc, 100 Watts max | | Single/ Dual -48 Vdc: -36 to -75 Vdc, 100 Watts max.<br>Single AC: 100 to 240 Vac, 50/60 Hz | | Single/ Dual -48 Vdc: -36 to -75 Vdc, 100 Watts max.<br>Single AC: 100 to 240 Vac, 50/60 Hz | |
| Temperature | Operating | Storage | Operating | Storage | Operating | Storage |
| | -20 to 65°C | -30 to 70°C | -20 to 65°C | -30 to 70°C | -20 to 65°C | -30 to 70°C |
| Weight | Net Weight | Max. Weight | Net Weight | Max. Weight | Net Weight | Max. Weight |
| | 6.0 Kg (13.23lbs) | 16 Kg (35.28lbs) | 4.0 Kg (8.82 lbs) | 8.0 Kg (17.64 lbs) | 5.0Kg (11.02lbs) | 10.0 Kg (22.05lbs) |
| Humidity | 0-95%RH (non-condensing) | | 0-95%RH (non-condensing) | | 0-95%RH (non-condensing) | |
| Mounting | Desk-top stackable, 19” /23” rack mountable | | Desk-top stackable, 19” /23” rack mountable | | Desk-top stackable, 19” /23” rack mountable | |
| Line Power Supply | Available only with DC power for G.SHDSL card only | | N/A | | N/A | |
| Power Consumption | Max 110 Watts | | Max 45 Watts | | Max 57 Watts | |
| MTBF | 421.91 years | | 852.80 years | | 213.68 years | |

### Certification

| AM3440-A | AM3440-B | AM3440-C |
|---|---|---|
| EN55022 Class A, EN50024, EN300 386, FCC Part 15 Class A, FCC Part 68, CS-03, IEC60950, UL60950, IEC 61850-3, IEEE 1613 | EN55022 Class A, EN50024, EN300 386, FCC Part 15 Class A, FCC Part 68, CS-03, IEC60950-1, EN60950-1 | EN55022 Class A, EN50024, EN300 386, FCC Part 15 Class A, IEC60950-1, CS-03, EN60950-1, IEC 61850-3, IEEE 1613 |

### Compliance

ITU G.703, G.704, G.706, G.732, G.736, G.823, G.826, G.711, G.712, G.775, O.151, V.11, V.28, V.54
IETF SNMP v.3 (RFC2571~2575), ITU-T Rec.G.821, ITU-T Rec.G.827

### Loop-VV Y-BOX

*LINE*

| | |
|---|---|
| Connector | BNC or RJ48C |
| Port Number | For Y-BOX with BNC connectors: 4 line ports<br>For Y-BOX with RJ48C connectors: 16 line ports |
| Protection | For Y-BOX with BNC connectors: support 2 Quad E1 plug-in card, 4 active E1, 4 standby E1<br>For Y-BOX with RJ48C connectors: support 8 Quad E1 plug-in cards, 16 active E1, 16 standby E1<br>For Y-BOX with RJ48C connectors: support 8 Quad T1 plug-in cards, 16 active T1, 16 standby T1 |

*Mechanical*

| | |
|---|---|
| Height | 44.5 mm/ 1.75 in |
| Width | 432 mm/ 17 in |
| Depth | 100 mm/ 3.9 in |

### Network Line Interface - T1

| | | | |
|---|---|---|---|
| Line Rate | 1.544 Mbps ± 32ppm | Output Signal | DSX1w/0, -7.5, -15 dB LBO |
| Line Code | AMI or B8ZS | Framing | D4/ESF (selectable) |
| Input Signal | DSX-1 0 dB to -30 dB w/ALBO | Connector | RJ48C |

### Network Line Interface - E1

| | | | |
|---|---|---|---|
| Line Rate | 2.048 Mbps ± 50 ppm | Framing | ITU G.704 |
| Line Code | AMI or HDB3 | Connector | BNC/RJ48C |
| Input Signal | ITU G.703 | Electrical | 75 ohm Coax/120 ohm twisted pair |
| Output Signal | ITU G.703 | Jitter | ITU G.823 |

### Network Line Interface - Mini 4E1

| | | | |
|---|---|---|---|
| Line Rate | 2.048 Mbps ± 50 ppm | Framing | ITU G.704 |
| Line Code | AMI or HDB3 | Connector | DB25S |
| Input Signal | ITU G.703 | Electrical | 75 ohm Coax/120 ohm twisted pair |
| Output Signal | ITU G.703 | Jitter | ITU G.823 |

### Network Line Interface - Mini 4T1

| | | | |
|---|---|---|---|
| Line Rate | 1.544 Mbps ± 32 ppm | Framing | D4/ESF |
| Line Code | AMI/B8ZS | Connector | DB25S |
| Input Signal | ITU G.703 DSX-1 0dB to -30dB w/ALBO | Output Signal | ITU G.703 DSX-1 w/o, -7.5, -15dB LBO<br>ITU G.703 DSX-1 w/short (0-110, 110-220, 220-330, 330-440, 440-550, 550~660 feet) |
| Jitter | AT&T TR 62411 | Pulse Template | AT&T TR 62411 |
| Data Rate | n * (64) Kbps (n=1-24) | | |

### Network Line Interface - 3E1

| | | | |
|---|---|---|---|
| Line Rate | 2.048 Mbps ± 50 ppm | Framing | ITU G.704 |
| Line Code | AMI or HDB3 | Connector | BNC/RJ48C |
| Input Signal | ITU G.703 | Electrical | 75 ohm Coax/120 ohm twisted pair |
| Output Signal | ITU G.703 | Jitter | ITU G.823 |
| Function | Support DS0-SNCP circuit level protection | | |

### Network Line Interface - 3T1

| | | | |
|---|---|---|---|
| Line Rate | 1.544 Mbps ± 32 ppm | Framing | D4/ESF |
| | | Output Signal | DSX-1 w/0, -7.5, -15dB LBO |
| Line Code | AMI/B8ZS | Connector | RJ48C |
| Input Signal | DSX-1 0dB to -30dB w/ALBO | Pulse Template | AT&T TR 62411 |
| Jitter | AT&T TR 62411 | Surge Protection | FCC Part 68 Sub Part D |
| Data Rate | N * (64) Kbps (n = 1 to 24) | | |

### Network Line Interface - 4E1

| | | | |
|---|---|---|---|
| Line Rate | 2.048 Mbps ± 50 ppm | Framing | ITU G.704 |
| Line Code | AMI or HDB3 | Connector | BNC/RJ48C |
| Input Signal | ITU G.703 | Electrical | 75 ohm Coax/120 ohm twisted pair |
| Output Signal | ITU G.703 | Jitter | ITU G.823 |

### Network Line Interface - 4T1

| | | | |
|---|---|---|---|
| Line Rate | 1.544 Mbps ± 32 ppm | Output Signal | DSX1w/0, -7.5, -15 dB LBO |
| Line Code | AMI or B8ZS | Framing | D4/ESF (selectable) |
| Input Signal | DSX-1 0 dB to -30 dB w/ALBO | Connector | RJ48C |

### Router-A Interface

| | |
|---|---|
| Number of ports | 2 LAN ports, Max. 64 WAN ports, Each WAN port has data rate n x 64K bps, 1≤ n ≤32 (≤ 4Mbps for total of all 64 WAN ports |
| Physical Interface | 10/100 BaseT x 2 |
| Connector | RJ45 |
| Routing protocol | RIP-I, RIP-II, OSPF, Static |
| Supporting Protocols | PPP (IPCP/BCP), MLPPP, HDLC, Frame Relay, and Cisco compatible HDLC, NAT/NAPT, DHCP |
| Diagnostic | Ping, Trace route |
| QoS | Rate limit |

### Router-B Interface

| | |
|---|---|
| Number of ports | 8 LAN ports, Max. 64 WAN ports. Each WAN port has data rate n x 64K bps, 1≤ n ≤32 (≤ 8Mbps for total of all 64 WAN ports |
| Physical Interface | 10/100 BaseT x 8 |
| Connector | RJ45 |
| Routing protocol | RIP-I, RIP-II, OSPF, Static |
| Supporting Protocols | PPP (IPCP/BCP), MLPPP, HDLC, Frame Relay, and Cisco compatible HDLC, NAT/NAPT, DHCP |
| Diagnostic | Ping, Trace route |
| QoS | Rate limit, Policy based Diffserv/DSCP |
| VLAN Q-in-Q | IEEE 802.1ad |

### Terminal Server Interface

| | |
|---|---|
| Connector | One DB-44 conversion cable to one DB-9 and two DB-25 connectors |
| Ports | One Async RS232 port, two Async/Sync RS232 ports.<br>The two Async/Sync ports can be configured independently as Asynchronous or Synchronous. |
| Data Rate | Async: 1.2kbps, 2.4kbps, 4.8kbps, 9.6kbps, 19.2kbps, 38.4kbps<br>Sync: 64 kbps |
| Layer 2 Protocol of RS232 Async | raw data |
| Layer 2 Protocol of RS232 Sync | PPP |
| Terminal Server Function | Supports Telnet |
| Router Function | RIP-I, RIP-II, Static Route |

### Fiber Optical Interface (FOM, 1FOM-A)

| | | | |
|---|---|---|---|
| Source | MLM Laser | Line Code | Scrambled NRZ |
| Wavelength | 1310 ± 50 nm, 1550 ± 40 nm | Detector Type | PIN-FET |
| 50 Km reach | | Protection | Optional 1+1 APS |

**NOTE:** Longer or shorter, 15 to 120Km, on special order.

| Optical Module | Fiber Direction | Wavelength (nm) | Connector | Distance (km) |
|---|---|---|---|---|
| SAA | Dual uni-directional | 1310 | SC (Subscriber Connector) | 30 |
| SBB | Dual uni-directional | 1310 | SC (Subscriber Connector) | 50 |
| SCC | Dual uni-directional | 1310 | FC (Fiber Connector) | 30 |
| SDD | Dual uni-directional | 1550 | SC (Subscriber Connector) | 20 |
| SEE | Dual uni-directional | 1550 | SC (Subscriber Connector) | 100 |
| SSM | Single bi-directional (master) | 1310/1550 | SC (Subscriber Connector) | 30 |
| SSS | Single bi-directional (slave) | 1550/1310 | SC (Subscriber Connector) | 30 |

**NOTE:** Other fiber optical options available on special order

### *G.SHDSL Line Interface*

| | |
|---|---|
| Number of ports | 2 or 4 |
| Line Rate for 4-channel G.shdsl | n x 64Kbps (n= 3 to 31) |
| Line Rate for 2-channel G.shdsl | n x 64Kbps (n= 3 to 15) |
| Line Code | 16-TCPAM, full duplex with adaptive echo cancellation |
| Connector | RJ45 |
| Electrical | Unconditioned 19-26 AWG twisted pair |
| Sealing current | Max. 20 MA source current |
| Clock Source | From System, Line |
| Diagnostic Test | G.SHDSL Loopback: To-LINE, To-bus<br>BERT: QRSS |

### *DTE Interface (X.21)*

| | |
|---|---|
| Data Port | 1-port DTE X.21 card |
| Data Rate | 56 or 64 Kbps, n = 1 to 32 |
| Connector | DB15S |

### *DTE Interface (V.35)*

| | |
|---|---|
| Data Port | 1-port V.35 card |
| Data Rate | 56 or 64 Kbps, n = 1 to 32 |
| Connector | DB25S (optional conversion cable DB25S to M34 connector) |

### *DTE Interface (EIA530/RS449)*

| | |
|---|---|
| Data Port | 1-port EIA530 card |
| Data Rate | 56 or 64 Kbps, n = 1 to 32 |
| Connector | DB25S (optional conversion cable DB25S male to DB37 female connector for RS449) |

### *DTE Interface (RS232/V.24)*

| | |
|---|---|
| Data Port | 1-port RE232 card |
| Data Rate | 56 or 64 Kbps *n, n=1 - 2 |
| Mapping | Any sequential time slots |

### *DTE Interface (RS232-X.50 mux. 8-port)*

| | | | |
|---|---|---|---|
| Data Port | Up to twelve 8-port RS232 cards | | |
| MUX | Maximum 5 subrate port per 64K bps | | |
| Data Rate | Asynchronous | Mux mode | 0.6K, 1.2K, 2.4K, 4.8K, 9.6K |
| | | Independent mode | 0.6K, 1.2K, 2.4K, 4.8K, 9.6K, 19.2K, 38.4K |
| | Synchronous | Mux mode | 0.6K, 1.2K, 2.4K, 4.8K, 9.6K |
| | | Independent mode | 0.6K, 1.2K, 2.4K, 4.8K, 9.6K, 19.2K, 38.4K, 48K, 64K |

| Card Type | Port Number 1 | 2 | 3 | 4 | 5 | 6 | 7 | 8 |
|---|---|---|---|---|---|---|---|---|
| Eight RJ48 | Async/ Sync Note 1 | Async/ Sync Note 1 | Async | Async/ Sync Note 1 | Async/ Sync Note 1 | Async | Async | Async |
| Two DB44 + Two RJ48 | Async/Sync | Async/Sync | Async | Async/Sync | Async/Sync | Async | Async | Async |

| | |
|---|---|
| Connector | Eight RJ48 (port 1 to port 8)<br>DB44 (port1,port2,port3), DB44 (port4,port5,port6), RJ48 (port7) and RJ48(port8) |
| Conversion Cable | A three-into-one conversion cable adapts the DB44 connector to 3 connecters (one DB9S and two DB25S) |
| Electrical | RS232 Interface, DCE |

**Note 1: Sync-** with rate up to 19.2 Kbps achieved by oversampling at 64 Kbps

### *DTE Interface (RS232 with V.110 encoding, 6-port)*

| | | | |
|---|---|---|---|
| Data Port | Up to 6 port | | |
| MUX | Maximum 6 subrate port / 64Kbps | | |
| Protocol | Supports V.110 | | |
| Data Rate | Asynchronous | Mux mode | 0.6K, 1.2K, 2.4K, 4.8K, 9.6K, 19.2K |
| | | Independent mode | 0.6K, 1.2K, 2.4K, 4.8K, 9.6K, 19.2K, 38.4K |
| | Synchronous | Mux mode | 0.6K, 1.2K, 2.4K, 4.8K, 9.6K, 19.2K, |
| | | Independent mode | 0.6K, 1.2K, 2.4K, 4.8K, 9.6K, 19.2K, 38.4K, 48K, 64K |

| Card Type | Port Number 1 | 2 | 3 | 4 | 5 | 6 |
|---|---|---|---|---|---|---|
| RJ48 | Async | Async | Async | Async | Async | Async |
| DB44 | Sync/Async | Sync/Async | Async | Sync/Async | Sync/Async | Async |

| | |
|---|---|
| Connector | DB44 (port1,port2,port3) DB44 (port4,port5,port6) or RJ48 (port 1 to Port 6 are 6RJ48) |
| Alarm | Remote Alarm<br>RTS Loss |
| Loopback | To-DTE<br>To-DS1 (To Line) |
| Electrical | RS232 Interface, DCE |

***DTE Interface (Data Bridge Card)***

| | | |
|---|---|---|
| Data Port | Up to twelve 8-port data bridge card (each card supports up to 120 DS0 for data bridge) | |
| Feature | 20 end points per multi-drop circuit to into a logical ended 56K or 64K channel<br>Per port supports bridge function to N remote Trib. Site (N=1~20) | |
| Data Rate | Asynchronous | Support to receive 1200 to 19200 bps asynchronous data via oversampling channel |
| Bridge function | one port with one DS-0 to many (Maximum is 20 for remote Tributary data box ) | |

20 drops for each DS0 to remote Tributary data box and 8 ports RS232 shared the 128 channels.

***6UDTEA Card Specifications***

**Mode 1: Sub-Rate mode**

*DTE Interface (RS232)*

| | | | |
|---|---|---|---|
| Data Port | Up to 2 | | |
| MUX | Maximum 6 subrate port / 64Kbps | | |
| Data Rate | Asynchronous | Mux mode | 0.6K, 1.2K, 2.4K, 4.8K, 9.6K, 19.2K |
| | | Independent mode | 0.6K, 1.2K, 2.4K, 4.8K, 9.6K, 19.2K, 38.4K |
| | Synchronous | Mux mode | 0.6K, 1.2K, 2.4K, 4.8K, 9.6K, 19.2K, |
| | | Independent mode | 0.6K, 1.2K, 2.4K, 4.8K, 9.6K, 19.2K, 38.4K, 48K, 64K |
| Connector | RJ48-ASYNC (Port5, Port6) | | |
| Alarm | Remote Alarm<br>RTS Loss | | |
| Loopback | To-DTE<br>To-DS1 (To Line) | | |
| Electrical | DCE | | |
| Protocol | V.110 | | |

*DTE Interface (X.21/RS232/RS422)*

| | | | |
|---|---|---|---|
| Data Port | Up to 4 | | |
| MUX | Maximum 4 subrate port / 64Kbps | | |
| Data Rate | Asynchronous | Mux mode | 0.6K, 1.2K, 2.4K, 4.8K, 9.6K, 19.2K |
| | | Independent mode | 0.6K, 1.2K, 2.4K, 4.8K, 9.6K, 19.2K, 38.4K |
| | Synchronous | Mux mode | 0.6K, 1.2K, 2.4K, 4.8K, 9.6K, 19.2K, |
| | | Independent mode | 0.6K, 1.2K, 2.4K, 4.8K, 9.6K, 19.2K, 38.4K, 48K, 64K |
| Connector | DB44 (Port1, Port2), DB44 (Port3, Port4) | | |
| Alarm | Remote Alarm<br>RTS Loss | | |
| Loopback | To-DTE<br>To-DS1 (To Line) | | |
| Electrical | DCE | | |
| Protocol | V.110 | | |

**Mode 2: N*64K Mode**

*DTE Interface (X.21/RS232/V.35/V.36/EIA530/RS449)*

| | |
|---|---|
| Data Port | Up to 4 (Port 1 to 4) |
| Data Rate | Synchronous N*64kbps, N = 1 to 32<br>Asynchronous mode is not supported. |
| Connector | DB44 (Port 1, Port 2), DB44 (Port 3, Port 4) |
| Alarm | RTS Loss |
| Loopback | To-DTE<br>To-DS1 (To Line) |
| Electrical | DCE |

**Note:** When oversampling is enabled in MODE2, port 5 ~ 6 will be disabled.

**Mode 3: Hybrid Mode**

*DTE Interface (X.21/RS232/V.35/V.36/EIA530/RS449)*

| | |
|---|---|
| Data Port | Up to 4 (Port 1 to 4) |
| Data Rate | Synchronous N*64kbps, N = 1 to 32 for port 1 ~ 3 ; N = 1 to 20 for port 4<br>Asynchronous mode is not supported. |
| Connector | DB44 (Port 1, Port 2), DB44 (Port 3, Port 4) |
| Alarm | RTS Loss |
| Loopback | To-DTE<br>To-DS1 (To Line) |
| Electrical | DCE |

*DTE Interface (RS232)*

| | |
|---|---|
| Data Port | Up to 2 (Port 5 and Port 6) |
| MUX | Maximum 2 oversampling port |
| Data Rate | No Synchronous mode supported<br>Asynchronous 200, 300, 0.6K, 1.2K, 2.4K, 4.8K, 9.6K, 19.2K, 38.4K, 57.6K, 115.2K, 128K |
| Connector | RJ48 (Port 5, Port 6) |
| Alarm | Remote Alarm<br>RTS Loss |
| Loopback | To-DTE<br>To-DS1 (To Line) |
| Electrical | DCE |

**Mode 4: Clock Pass Through**

*DTE Interface (X.21/RS449/RS422/RS232/V.35/V.36/EIA530)*

| | |
|---|---|
| Data Port | Up to 4 (Port 1 to 4) |
| Data Rate | Synchronous 0.6K, 1.2K, 2.4K, 4.8K, 9.6K, 19.2K, 38.4K<br>Tx and Rx byte count |
| Connector | DB44 |
| Alarm | LOLC, LOCH, CRE |
| Loopback | To-DTE, To-DS1 (To Line) |
| Electrical | DCE |

Note: Port 5~6 are disabled in Mode 4.

**Mode 5: N x 64K with Local and Remote Loopback**

*DTE Interface (X.21/RS449/RS422/RS232/V.35/V.36/EIA530)*

| | |
|---|---|
| Data Port | Up to 4 (Port 1 to 4) |
| Data Rate | Synchronous N*64kbps, N = 1~32 |
| Connector | DB44 |
| Protection | DTE signal duplicated via Y-box and transported by working and protection cards |
| Alarm | RTS Loss, FPGA fail |
| Diagnostics | DTE Loopback: To-DTE, To-DS1 (To Line)<br>Local and Remote Loopback (except for X.21 interface)<br>V.54 standard<br>BERT |
| Electrical | DCE |

Note: Port 5~6 are disabled in Mode 5.

### *1 Port OCU-DP Interface Card*

| | |
|---|---|
| Ports | 1 Ports card |
| Operating Modes | 4-wire DDS or switched 56 |
| Dedicated Rates | SYNC: 2.4, 4.8, 9.6, 19.2, 56 and 64k clear channel<br>Conforms with AT&T Pub 41458 |
| OCU DP Operation | Conforms with AT&T 62310 and ANSI T1.410 |
| Local Loop Signal | Bipolar Return to zero, 50% duty cycle |
| Transmit Amplitude | +/- 1.5 V (+/- 10%) peak, all rates except 9.6k<br>+/- 0.75 V (+/- 10%) peak at 9.6k |
| Transmit Source Impedance | 135 Ohms +/- 20% |
| Receive Input Impedance | 135 Ohms +/- 20% |
| Receiver Sensitivity/ Dynamic Range | 0 to 43 dB loop loss at 72K & 56K<br>0 to 34 all other rates |
| Physical Interface | 4-wire loop interface<br>RJ45 modular connector |
| Network to Loop Test Codes | Zero code suppression, Idle, out of service, UMC, MOS, TC, ABS, channel loopback, OCU and DSU loop-back, latch loop-back (TIP, LSC, LBE, FEV) |
| Loop to Network Test Codes | Zero code suppression, Idle |

### *8 Port OCU-DP Interface Card*

| | |
|---|---|
| Ports | 8 Ports for each card |
| Line Status Indicator | Per Port 1 dual color LED; Red for LOS, Green for SYNC |
| Network Connector | RJ48S |
| Electrical Network Connection | Tip/Ring and Tip1/Ring1 |
| Transmit Source Impedance | 135 Ohms +/-20% |
| Receive Input Imdednace | 135 Ohms +/-20% |
| Receiver Sensitivity | 0 to 43 dB loop loss at 72K & 56K |
| Dynamic Range | 0 to 34 all other rates Automatic line equalization |
| Pulse Amplitude | +/- 1.5V (+/-10%) peak, all rates except 9.6K<br>+/-0.75 (+/-10%) peak at 9.6K<br>Bipolar Return to zero, 50 duty cycle |
| Sealing Current | Typically 16mA DC |
| Operating Modes | 4-wire DDS<br>Switched 56 support is optional |
| Circuit Rates | SYNC: 2.4, 4.8, 9.6, 19.2, 56, 72 kbps (64k) clear channel<br>Conforms with AT&T Pub 41458 |
| Encoding and decoding rules | Use bipolar violation to indicate control information: Idle, out of service, Zero Subsitution using unframed loops |
| Maintenance control | DSU Non-latching loop-back code (for 2.4, 4.8, 9.6, 19.2, 56k circuit rate)<br>DSU Latching loop-back (TIP, LSC, LBE, FEV) code (for 72k circuit rate)<br><br>Machine maintenance OCU/DP card operation:<br>Payload loopback<br>OCU loopback<br>Local loopback<br>Bi-directional loopback<br>V.54 remote loopback code<br>Custom defined remote loopback code<br>BERT test support all ones, all zeros, 2047,511,63 pattern. |
| Fault and Performance | LOS, OOS, ES, SES and UAS alarm.<br>Current, last 96 registry and 7 days performance storage. |
| Enviroment | Operating: 0-50°C<br>Storage: -25-75°C<br>Humidity: Up to 90% RH non-condensing |
| Specification Standard | ANSI T1.410; AT&T Pub 62319, AT&T Pub 62310, ITU-T V.54 |

### *Co-directional Interface*

| | |
|---|---|
| Interface | ITU G.703 64 Kbps co-directional interface |
| Connector | 120ohm, RJ48 |
| Line Distance | Up to 500 meters |
| Loopack | DTE Payload Loopback, Local Loopback |

### C37.94 Interface

**820nm**

| | | | |
|---|---|---|---|
| Source | LED | Optical Line Rate | 2.048Mbps |
| Wavelength | 820nm | Line Code | NRZ |
| Connector | ST | Fiber Type | Multi-mode |
| Optical Power | -12dBm | | |

**850nm**

| | | | |
|---|---|---|---|
| Source | VCSEL | Optical Line Rate | 2.048Mbps |
| Wavelength | 850nm | Line Code | NRZ |
| Connector | ST Duplex Plastic Connector | Fiver Type | Multi-mode |
| Optical Power | -5.5dBm | | |

**1310nm**

| | | | |
|---|---|---|---|
| Source | LED | Optical Line Rate | 2.048Mbps |
| Wavelength | 1310nm | Line Code | NRZ |
| Connector | ST | Fiber Type | Single & Multiple |
| Optical Power | -14dBm | | |

**1550nm**

| | | | |
|---|---|---|---|
| Source | LED | Optical Line Rate | 2.048Mbps |
| Wavelength | 1550nm | Line Code | NRZ |
| Connector | SC | Fiber Type | Single & Multiple |
| Optical Power | -14dBm | | |

### Dry Contact Type A Interface

| **Inputs -** | | **Outputs -** | |
|---|---|---|---|
| 8-channel | 2-port per card, 4-pair per port | 8-channel | 8-pair per card |
| Connector | RJ45 | Connector | Screw type |
| Internal Resistance | 1 K | Initial Insulation Resistance | Min. 100M ohm (at 500 Vdc) |
| Activation Current | 3 ma | Max. Current | 5A |
| Deactivation Current | 1.5 ma | Max. Voltage | 100 Vdc, 250 Vac |
| Allowable Current | 4 ma | Short-circuit Current | 5A |
| Input port | Provide 3.3V output | | |

### Dry Contact Type B Interface

| **Inputs -** | | **Outputs -** | |
|---|---|---|---|
| 8-channel | 2-port per card, 4-pair per port | 8-channel | 8-pair per card |
| Connector | RJ45 | Connector | Screw type |
| Internal Resistance | 100 K | Initial Insulation Resistance | Min. 1000M ohm (at 500 Vdc) |
| Activation Current | 3 ma | Max. Current | 2A |
| Deactivation Current | 1.5 ma | Max. Voltage | 220 Vdc, 250 Vac |
| Allowable Current | 4 ma | | |

### Voice Card (QEMA)

| | |
|---|---|
| Connector | One 44-pin connector, adaptor cable included for 4 RJ45 connectors. |
| Power | 110-220Vac, ±48Vdc |
| Alarm Conditioning | CGA busy after 2.5 seconds of LOS, LOF |
| Encoding | A-law or μ-law, user selectable as a group |
| Impedance | Balanced 600 or 900 |
| Gain Adjustment (Per-port setting) | -10 to +7 dB / 0.1dB step for transmit (D/A) gain |
| Gain Variation | ± 0.5 dB at 0 dBm0 input |
| Frequency Response | ± 0.5 dB from 300 to 3400 Hz, coincide with ITU-T G.712 |
| I/O Power Range | A/D Analog input level: -66 dBm (0.00039 Vrms) ~ + 3 dBm (1.09 Vrms)<br>D/A Analog output level: -66 dBm (0.00039 Vrms) ~ + 4 dBm (1.22 Vrms) |
| Longitudinal Balance | > 63dB |
| Longitudinal Conversion Loss | ＞ 46dB |
| Total Distortion | ＞ 35 dB at 0 dBm0 input |
| Idle Channel Noise | ＜ -65 dBm0p |
| Wire Mode | 2 wire and 4 wire |
| Signaling | Type I, Type II, Type III, Type IV, Type V, and TO (Transmission Only) |
| M Lead Output Current | 18 mA (maximum) |
| E Lead Sensor Current | 0.3 mA (minimum) |
| EM Type Setting | Jump Selectable |
| Relative Humidity | 0% to 95% |
| Carrier Connection | Side A and side B setup by Jump |

All in-band signaling tones are carried transparently by the digitizing process.
Customer is responsible for in-band signaling compatibility between a telephone and a switch, or between a PBX and a switch.

***Voice Card (8EMA)***

| | |
|---|---|
| Connector | Eight RJ45 |
| Power | 100-240Vac or ±48 Vdc for 8EMA |
| Alarm Conditioning | CGA busy after 2.5 seconds of LOS, LOF |
| Encoding | A-law or μ-law, user selectable together for all |
| Impedance | Balanced 600 or 900 ohms |
| Gain Adjustment (Per-port setting) | -16 to +7 dB / 0.1dB step for transmit (D/A) gain<br>-16 to +14 dB / 0.1dB step for receive (A/D) gain |
| I/O Power Range | A/D Analog input level: -66 dBm (0.00039 Vrms) ~ + 3 dBm (1.09 Vrms)<br>D/A Analog output level: -66 dBm (0.00039 Vrms) ~ + 4 dBm (1.22 Vrms) |
| Gain Variation | ±0.5 dB at 0 dBm0 input |
| Frequency Response | ±0.5 dB from 300 to 3400 Hz, coincide with ITU-T G.712 |
| Longitudinal Conversion Loss | > 46dB |
| Total Distortion | ＞ 35 dB at 0 dBm0 input |
| Idle Noise | ＜ -65 dBm0p |
| Carrier Connection | Side A ( exchange side) and Side B (carrier side) setup by side switch |
| Idle Channel Noise | Max. –65 dBm0p |
| Wire Mode | 2 wire and 4 wire (programmable) |
| Signaling | Type 1, Type 2, Type 3, Type 4, and Type 5, Transmit only (programmable) |
| Modems | Full compatibility with V.90 modems |

- All in-band signaling tones are carried transparently by the digitizing process.
- Customer is responsible for in-band signaling compatibility between a telephone and a switch, or between a PBX and a switch.

***QMAGA (old crank-handle hot-line telephones), MRD (Manual Ring Down) Voice Card***

| | |
|---|---|
| Connector | RJ11 x 4 |
| Power | 110-220 Vac or ±48 Vdc |
| Alarm Conditioning | CGA busy after 2.5 seconds of LOS, LOF |
| Encoding | A-law or μ-law, user selectable together for all |
| Impedance | Balanced 600 or 900 ohms (for magneto telephone impedance ) |
| Longitudinal Conversion Loss | > 46dB |
| Gain Adjustment | -16 to +7 dB / 0.1dB step transmit gain (D-A)<br>-16 to +13 dB/0.1dB step receive gain (A-D) |
| Signal/ Distortion | > 25dB with 1004 Hz, 0dBm input |
| Frequency Response | ± 0.5 dB from 300 to 3400 Hz, coincide with ITU-T G.712 |
| Idle Channel Noise | Max. –65 dBm0p |
| *Signaling* | |
| Minimum Detectable Ringing Voltage | 16 Vrms |
| Crank Detectable Across | L1 & L2 Mode (Tip and Ring), L1 & GND Mode(Tip and GND) |
| Crank Detected time | Valid crank: more than 250 ms<br>Invalid crank: less than 160 ms |
| Ringing Generation | Voltage: 76 Vrms (sine wave)<br>Frequency: 25Hz |
| Ring duration | Software configurable options:<br>***1. PLAR OFF***<br>**Continuous**<br>Ring duration depends on cranking time<br>**One Time**<br>Crank the phone for one time, and the ring duration of the far-end phone could be 0.7, 1.0, 1.5 or 2.0 sec<br>***2. PLAR ON***<br>when FXS phone off-hooked, the ring duration of the far-end magneto phone could be 0.7, 1.0, 1.5 or 2.0 sec |
| Ringing Send Across | L1 & L2 Mode (Tip and Ring), L1 & GND Mode(Tip and GND) |
| Signaling | Turn Magneto Phone crank (Ringing across Tip and Ring or Tip and Ground) |
| Signaling Bit A,B,C,D | Programable |

- Signaling is carried transparently by the digitizing process.
- Use Magneto card default setting (PLAR OFF) for communications between magneto telephones
- Use Magneto card PLAR ON mode setting for communications between a magneto telephone and a regular telephone
- PLAR stands for *Private Line Auto Ring down.*

### *12 MAGA (old crank-handle hot-line telephones), MRD (Manual Ring Down) Voice Card*

| | |
|---|---|
| Connector | RJ11 x 12 |
| Power | 110-220 Vac or ±48 Vdc |
| Alarm Conditioning | CGA busy after 2.5 seconds of LOS, LOF |
| Encoding | A-law or μ-law, user selectable per card configurable |
| Impedance | Balanced 600 or 900 ohms (for magneto telephone impedance ) |
| Longitudinal Conversion Loss | > 46dB |
| Gain Adjustment | -21 to +7 dB / 0.1dB step transmit gain (D-A)<br>-21 to +13 dB/0.1dB step receive gain (A-D) |
| Signal/ Distortion | > 25dB with 1004 Hz, 0dBm input |
| Frequency Response | ± 0.5 dB from 300 to 3400 Hz, coincide with ITU-T G.712 |
| Idle Channel Noise | Max. –65 dBm0p |
| *Signaling* | |
| Minimum Detectable Ringing Voltage | 16 Vrms |
| Crank Detectable Across | L1 & L2 Mode (Tip and Ring), L1 & GND Mode(Tip and GND) per port software programmable |
| Crank Detected time | Valid carnk: more than 250 ms<br>Invalid crank: less than 160 ms |
| Ringing Generation | Voltage: 76 Vrms (sine wave)<br>Frequency: 25Hz |
| Ring duration | Software configurable options:<br>1. PLAR OFF (Continuous Mode)<br>Ring duration depends on cranking time<br><br>2. PLAR OFF (One-time) Mode<br>Crank the phone for one time, and the ring duration of the far-end phone could be 0.7, 1.0, 1.5 or 2.0 sec<br><br>3. PLAR ON<br>When FXS phone off-hooked, the ring duration of the far-end magneto phone could be 0.7, 1.0, 1.5 or 2.0 sec |
| Ringing Send Across | L1 & L2 Mode (Tip and Ring), L1 & GND Mode(Tip and GND) |
| Signaling | Turn Magneto Phone crank (Ringing across Tip and Ring or Tip and Ground) |
| Signaling Bit A,B,C,D | Programable |

- Signaling is carried transparently by the digitizing process.
- Use Magneto card default setting for communications between magneto telephones
- Use Magneto card PLAR mode setting for communications between a magneto telephone and a regular telephone

### *Echo Canceller Card*

| | |
|---|---|
| Echo Cancellation | 64ms uni-directional, 64ms bi-directional and 128ms uni-directional |
| Channel | Up to 64 channels |
| Functions | - one way or bi-direction cancellation from PCM bus to ECA card<br>- E1/T1 multichannel echo cancellation |
| PCM encoder/decoder | Compatible with ITU-T G.711 A-law/Mu-law coding. |
| LED Indicator | Multi-color indication |
| Compliant | ITU-T G.165 and ITU-T G.168-2000 and 2002 |

### *ABRA Card*

| | |
|---|---|
| Group | Up to 8 groups per card, 16 members per group |
| Analog Bridge Mode | Master/Slave Architecture<br>Downstream : 2 to many<br>Upstream : many to 2 |
| Voice Conference Mode with CAS Signalling | Any-to-any conference bridge<br><br>Up to 16 members in one conference group<br>Silence detection/suppression |

| | |
|---|---|
| RS232 Data Bridge Mode | Master/Slave Architecture<br>Downstream : 2 to many (up to 14 Slave units)<br>Upstream : many to 2 |
| Voice Protection Mode | One Master to two Slaves for 1+1 protection<br>Analog signals only<br>42 protection groups |
| OCU-DP Data Bridge Mode | Master/Slave Architecture<br>Downstream: 1 to many (up to 14 Slave units)<br>Upstream: many to 1 |
| PCM encoder/decoder | Compatible with ITU-T G.711 A-law/Mu-law coding. |
| LED Indicator | Multi-color indication |

### *M4TE Cards*

The M4TE card supports DB37 to 4RJ48 connector, DB37 to 8BNC connector, and wire-wrap connector. E1/T1 per card is software configurable.

*Network Line Interface - T1*

| | | | |
|---|---|---|---|
| Line Rate | 1.544 Mbps ± 32 ppm | Framing | D4/ESF |
| Line Code | AMI/B8ZS | Connector | RJ48F, BNC, T1 |
| Input Signal | DSX-1 0dB to –30dB w/ALBO | Output Signal | DSX-1 w/0, -7.5, -15 dB LBO |
| Jitter | AT&T TR 62411 | Pulse Template | AT&T TR 62411 |
| Data Rate | n * (64) Kbps (n=1 - 24) | Surge Protection | FCC Part 68 Sub Part D |

*Network Line Interface - E1*

| | | | |
|---|---|---|---|
| Line Rate | 2.048 Mbps ± 50 ppm | Framing | ITU G.704 |
| Line Code | AMI/HDB3 | Connector | RJ48F or BNC |
| Input Signal | ITU G.703 | Output Signal | ITU G.703 |
| Jitter | ITU G.823 | Electrical | 75Ω coax/120Ω twisted pair |
| Data Rate | n * (64) Kbps (n = 1 - 32) | | |

### *Voice Card (QFXO)*

Quad FXO voice card (4 FXO per plug-in)

| | | |
|---|---|---|
| Connector | 1, 2, 3, or 4 FXO per RJ11 connector | |
| Power for QFXO | 110-220Vac, -24Vdc, and –48Vdc | |
| Alarm Conditioning | CGA busy after 2.5 seconds of LOS, LOF | |
| Encoding | A-law or μ-law, user selectable together for all | |
| AC impedance | Balanced 600 or 900 ohms (selectable together for all) | |
| Longitudinal Rejection | 55 dB | |
| Loss Adjustment | 0, 3, 6, or 9 dB transmit & receive | |
| Signal/ Distortion | > 46dB with 1004 Hz, 0dBm input | |
| Frequency Response | ± 0.5 dB from 300 to 3400 Hz, coincide with ITU-T G.712 | |
| FXS Loop Feed | -48Vdc with 25mA current limit per port<br>Jumper Selectable: 25mA, 30mA, 35mA | |
| FXO | Ringing REN | 0.5B (AC) |
| | Detectable Ringing | 25 Vrms |
| | Loop Resistance | ≤ 1800 Ω |
| | DC impedance (ON-HOOK) | > 1M Ω |
| | DC impedance(OFF-HOOK) | 235 Ω @ 25mA feed |
| | | 90 Ω @ 100mA feed |
| FXS Ringing | Support 2 REN per port (1 REN = 6930Ω + 8 μF)<br>20 Hz, other frequencies: 16.7Hz, 25 Hz, 50Hz (Jump selectable)<br>78 Vrms (sine wave) (45 Vrms to 86 Vrms wide range by Resistor selectable)<br>2 sec on 4 sec off, or 1 sec on 2 sec off optional for PLAR | |
| Metering Pulse | 12KHz/ 16KHz<br>• Power: 10dBm<br>• Sensitivity: -27dBm (-21dBm to -45dBm by Resistor selectable) | |
| Signaling | Loop Start, GND-Start, Metering Pulse (12KHz, 16KHz), DTMF, Dialing Pulse, PLAR, Battery Reverse (supports Line Reverse Signaling for Billing) | |

- All in-band signaling tones are carried transparently by the digitizing process.
- Customer is responsible for in-band signaling compatibility between a telephone and a switch, or between a PBX and

a switch.
- -24Vdc power is for FXS PCB version C and up

### *Voice Card (QFXSA)*

Quad FXSA voice card (4 FXS per plug-in)

| | |
|---|---|
| Connector | 1, 2, 3, or 4 FXS per RJ11 connector |
| Power | ±48Vdc |
| Alarm Conditioning | CGA busy after 2.5 seconds of LOS, LOF |
| Encoding | A-law or μ-law, user selectable |
| AC impedance | Balanced 600 or 900 ohms (user selectable) |
| Longitudinal Rejection | 55 dB |
| Gain Adjustment | -21 to +3 dB / 0.1 dB step for transmit (D/A) & receive (A/D) gain |
| Signal/ Distortion | > 46dB with 1004 Hz, 0dBm input |
| Frequency Response | ± 0.5 dB from 300 to 3400 Hz, coincide with ITU-T G.712 |
| Loop Feed | ±48Vdc with 25mA current limit per port<br>Jumper Selectable: 25mA, 30mA, 35mA |
| Ringing | Support 2 REN per port (1 REN = 6930Ω + 8 μF)<br>16.7Hz, 20Hz, 25 Hz, 50Hz (user programmable)<br>Default 78 Vrms (sine wave) (64 Vrms by Jumper setting)<br>2 sec on 4 sec off, or 1 sec on 2 sec off optional for PLAR (user programmable) |
| Metering Pulse | 12KHz/ 16KHz (2.4Vrm/1Vrm user programmable) |
| Signaling | Loop Start (Metering Pulse, DTMF, Dialing Pulse, PLAR), GND-Start (Tip Open, Ring GND), OOS Alarm, Battery Reverse |

- All in-band signaling tones are carried transparently by the digitizing process.
- Customer is responsible for in-band signaling compatibility between a telephone and a switch, or between a PBX and a switch.

### *Voice Card (12FXSA, 12FXOA)*

| | | |
|---|---|---|
| Connector | Twelve RJ11 | |
| Alarm Conditioning | CGA busy after 2.5 seconds of LOS, LOF | |
| Encoding | A-law or μ-law, user selectable together for all | |
| AC Impedance | Balanced 600 or 900 ohms (selectable together for all) | |
| Longitudinal Conversion Loss | > 46dB | |
| Cross talk measure | Max -70dBm0 | |
| Gain Adjustment | FXSA: -21 to +3 dB / 0.1dB step transmit & receive<br>FXOA: -21 to +10 dB / 0.1dB step transmit & receive | |
| Signal/ Distortion | > 25dB with 1004 Hz, 0dBm input | |
| Frequency Response | ± 0.5 dB from 300 to 3400 Hz, coincide with ITU-T G.712 | |
| Idle Channel Noise | Max. –65 dBm0p | |
| Variation of Gain | ±0.5dB | |
| FXOA | Ringing REN | 0.5B (AC) |
| | Detectable Ringing | 25 Vrms |
| | Loop Resistance | ≤ 1800 Ω |
| | DC Impedance (ON-HOOK) | > 1M Ω |
| | DC Impedance (OFF-HOOK) | 235 Ω @ 25mA feed ; 90 Ω @ 100mA feed |
| FXSA Loop Feed | -48Vdc with 25mA current limit per port<br>Jumper Selectable: 25mA(default=25mA), 30mA, or 35mA(sn=S1) | |
| FXSA Signalling | Normal / PLAR: Private Line Auto Ring down | |
| FXSA Ringing | 1 REN at 5K meters per port<br>16.7Hz, 20Hz, 25Hz, 50Hz, user selectable for all ports<br>Jumper selectable: 64, 76, and 85 Vrms (triangle wave), (default= 76 Vrms for Ring Voltage)<br>2 sec on 4 sec off, or 1 sec on 2 sec off optional for PLAR ON | |
| FXSA Tone | Alarm Tone: 480Hz/620Hz/-24dBm<br>Ring Back Tone: 440Hz/480Hz/-19dBm | |
| FXSA functions | Basic functions: Bettary Reverse, Loop Star, PLAR<br>Optional functions: PLAR ON/PLAR bit programmable, Ground Start, and/or Metering Pulse. | |
| Signaling Bit A,B,C,D | Programable bit | |

- All in-band signaling tones are carried transparently by the digitizing process.
- Customer is responsible for in-band signaling compatibility between a telephone and a switch, or between a PBX and a switch.
- FXSA specification shown above support FXSA hardware version N and up.

## TDMoEA

### Combo Gigabit Ethernet (GbE) Interface

| | |
|---|---|
| Number of Ports | 2 |
| Speed | 10/100/1000M bps |
| Connector | RJ45 for twisted pair GbE, LC for optical GbE, auto detection |

### Gigabit Ethernet (GbE) Interface

| | |
|---|---|
| Number of Port | 2 |
| Speed | 10/100/1000 BaseT |
| Connector | RJ45 |

### Ethernet Function

| | |
|---|---|
| Basic Features | MDI/MDIX for 10/100/1000M BaseT auto-sensing<br>Ping function contained ARP |
| Packet Transparency | Packet transparency support for all types of packet types including IEEE 802.1q VLAN and 802.1ad (Q-in-Q) |
| QoS | User configurable 802.1p CoS, ToS in out-going IP frame |
| Traffic Control | Ingress packet Rate limiting buckets per port for Ethernet port<br>Supporting Rate-based and Priority-based rate limiting for LAN port<br>Granularity:<br>a. From 64 Kbps to 1 Mbps in increments of 64 Kbps<br>b. From 1 Mbps to 100 Mbps in increments of 1 Mbps<br>c. From 100 Mbps to 1000 Mbps in increments of 10Mbps<br>Pause frame issued when the traffic exceeding the limited rate before packet dropped following IEEE802.3X |
| Link Aggregation | WAN supports Link Aggregation |

### Jitter & Wander

PPM: per G.823 Traffic

### Standards Compliance

| IEEE | | IETF | |
|---|---|---|---|
| 802.1d | MAC Table Learning and STP | RFC2236 | IGMP Snooping v2* |
| 802.1p | Priority Code Point | | |
| 802.1q | VLAN | RFC2495 | E1/T1 OAM |
| 802.1s | MSTP* | | |
| 802.1w | RSTP | | |
| 802.1ad | Tag Stacking (Q-in-Q) | RFC 4553 | SAToP |
| 802.3ad | Link Aggregation | RFC 5086 | CESoPSN |
| | | **ITU** | |
| **MEF** | | G.823/G.824 | Traffic Interface |
| 8 | CESoETH | | |

### Certifications

| | |
|---|---|
| EMC | EN55022 Class A, EN50024, FCC Part 15 Subpart B Class A |
| Safety | EN60950-1(CE) |

* Future option

## VOIPGA

### Physical Interfaces

- WAN: 1 x 100BaseTx
- LAN: 2 x 100BaseTx

### Voice Features

- G.711 a/μ, G.726(32K), G.729, G.723.1
- Silence Suppression and Detection
- Echo Cancellation (G.168)
- Adjustable jitter buffer
- Adjustable packet time (by Codec type)
- Programmable Gain Control[Note]
- Adjustable call progress tone volume[Note]

*Telephony Specifications*

- In-Band DTMF, Out-of-Band DTMF Relay (RFC2833 or SIP INFO)
- Caller ID[Note]
- T.30 FAX passthrough, T.38 Real Time FAX Relay[Note]

*SIP Call Features*

- Peer to Peer Call
- Call Forward - unconditional, busy[Note]
- Do Not Disturb[Note]
- Hot Line and Warm Line

*SIP Account Management*

- By channel registration
- Invite with Challenge
- Support RFC3986 SIP URI format
- Phone Book Function (point-to-point call, and cross-area call without SIP Server)

**Note:** Configurable only through WEB management.

# Application Illustrations

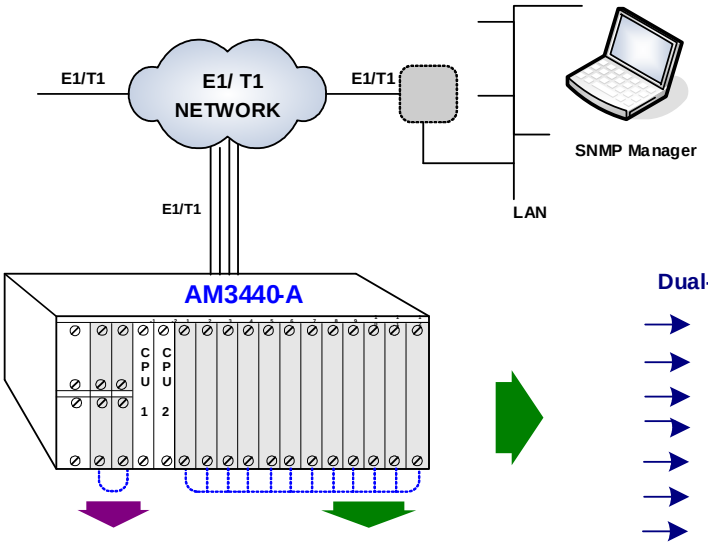


**Dual-slot plug-in cards:**

- 6 - channel X.21/V.11(D)
- 6 - channel V.35 (D)
- 6 - channel V.36 (D)
- 6 - channel EIA530 / RS449 (D)
- 24 - channel FXS (D)
- 24 - channel FXO (D)
- 24 - channel FXOA (D)
- 2 - channel G.SHDSL w / line power (D)
- 4 - channel G.SHDSL w/ line power (D)
- Transfer Trip card

**Mini-Slot plug-in Cards**

- 1 - channel E1
- 1 - channel T1
- Mini Quad E1
- Mini Quad T1
- 32 WAN port Router
- 64 WAN port Router
- Fiber Optical Interface
- 3 - channel Terminal Server
- 1 - channel DTE (1X.21, 1V.35, 1RS232, or 1EIA530)
- ECA
- ABRA
- QMAGA*
- QFXO*
- QFXSA*
- QEMA*
- 1- channel OCU-DP*

**Single-Slot plug-in Cards :**

- 3 - channel E1 Note
- 4 - channel E1
- 4 - channel T1
- 8 - channel OCU-DP
- 2 - channel G.SHDSL w/o line power
- 4 - channel G SHDSL w/o line power
- 8 - channel G.703 64 Kbps
- 8 - channel Dry Contact I/O
- 8 - channel Dry Contact I/O type B
- 8 - channel 2W/4W E&M (D)
- 8 - channel 2W/4W E&MA
- 12 - channel FXS (D)/ FXSA
- 12 - channel FXO (D) / FXOA
- 12 - channel Magneto
- 1 - channel C37.94
- 4 - channel C37.94
- 8 - channel RS232 with X.50 subrate
- 6 - channel V.110
- 8 - LAN - port / 64 - WAN - port Router - B
- VOIPGA
- Conference card (D)
- TDMoE (D) / TDMoEA
- 8- Data Bridge
- 1FOM-A
- 8UDTEA
- 6UDTEA

Note : Only CHAJ Unit applicable to DS0 SNCP function
(D) = Discontinued
*For Chassis AK only

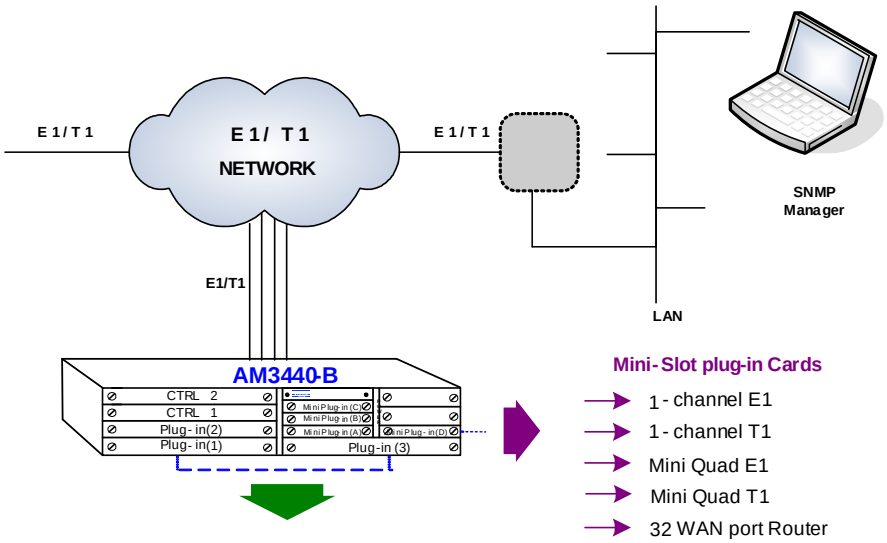


**Mini-Slot plug-in Cards**

- 1 - channel E1
- 1 - channel T1
- Mini Quad E1
- Mini Quad T1
- 32 WAN port Router
- 64 WAN port Router
- Fiber Optical Interface
- 3 - channel Terminal Server
- QFXO
- QMAGA
- QFXSA
- 1- channel DTE (1X.21, 1V.35, 1RS232, or 1EIA530)
- 1- channel OCU-DP
- ECA
- ABRA
- QEMA

**Dual-slot plug-in cards:**

- 6 - channel X.21/V.11(D)
- 6 - channel V.35 (D)
- 6 - channel V. 36 (D)
- 6 - channel EIA530/RS449 (D)
- 24- channel FXS (D)
- 24- channel FXO (D)
- 2 - channel G .SHDSL w/o line power (D)
- 4 - channel G .SHDSL w/o line power (D)
- Transfer Trip card

**Single-Slot plug-in Cads:**

- 3 - channel E1 Note
- 3 - channel T1
- 4 - channel E1
- 4 - channel T1
- 2 - channel G.SHDSL w/o line power
- 4 - channel G.SHDSL w/o line power
- 8 - channel G.703 64 Kbps
- 8 - channel Dry Contact I/O
- 8 - channel Dry Contact I/O Type B
- 8 - channel 2W/4W E&M (D)
- 8 - channel 2W/4W E&MA
- 12 - channel FXS (D) / FXSA
- 12 - channel FXO (D) / FXOA
- 12 - channel Magneto
- 1 - channel C37. 94
- 4 - channel C37. 94
- 8 - channel RS232 with X.50 subrate
- 6 - channel V.110
- 8 - LAN-port / 64-WAN - port Router -B
- 8 - Data Bridge
- VOIPGA
- 1FOMA
- 8UDTEA
- 6UDTEA
- Conference card (D)
- TDMoE (D) / TDMoEA

Note: Not Applicable to DS0 SNCP function
(D) = Discontinued

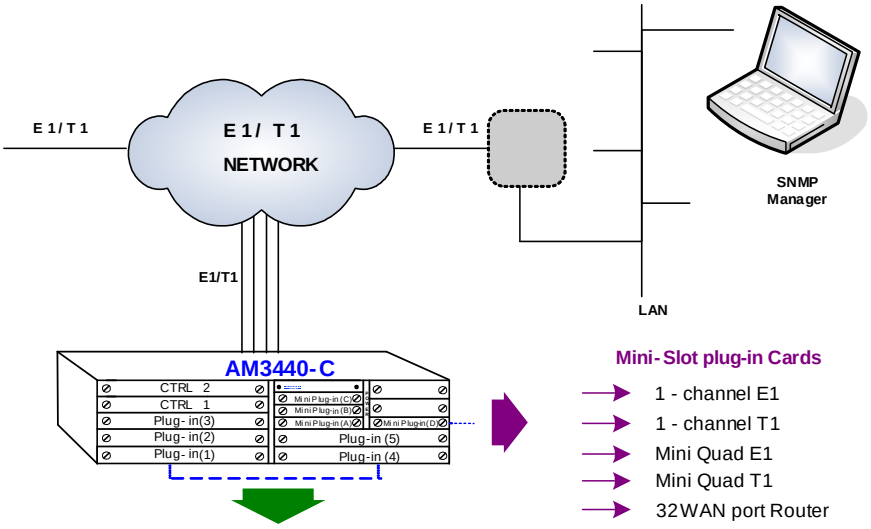


**Mini-Slot plug-in Cards**

- 1 - channel E1
- 1 - channel T1
- Mini Quad E1
- Mini Quad T1
- 32 WAN port Router
- 64 WAN port Router
- Fiber Optical Interface
- 3 -channel Terminal Server
- QFXO
- QMAGA
- QFXSA
- 1 - channel DTE (1X.21, 1V.35, 1RS232, or 1EIA530)
- 1 - channel OCU-DP
- ECA
- ABRA
- QEMA

**Dual-slot plug-in cards:**

- 6 - channel X.21/V.11 (D)
- 6 - channel V.35 (D)
- 6 - channel V.36 (D)
- 6 - channel EIA530/RS449 (D)
- 24- channel FXS (D)
- 24- channel FXO (D)
- 2 - channel G.SHDSL w / o line power (D)
- 4 - channel G.SHDSL w / o line power (D)
- Transfer Trip card

**Single-Slot plug-in Cads:**

- 3 - channel E1 Note
- 3 - channel T1
- 4 - channel E1
- 4 -channel T1
- 2 - channel G . SHDSL w / o line power
- 4 - channel G . SHDSL w / o line power
- 8 - channel G .703 64 Kbps
- 8 - channel Dry Contact I/O type B
- 8 - channel Dry Contact I/O
- 8 - channel 2W/4W E&M (D)
- 8 - channel 2W/4W E&MA
- 12 - channel FXS (D) / FXSA
- 12 - channel FXO (D) / FXOA
- 12 - channel Magneto
- 1 - channel C37.94
- 4 - channel C37.94
- 8 - channel RS232 with X.50 subrate
- 6 - channel V.110
- 8 - LAN-port/ 64-WAN - port Router -B
- VOIPGA
- Conference card (D)
- TDMoE (D) / TDMoEA
- 8- Data Bridge
- 1FOMA
- 8UDTEA
- 6UDTEA

Note : Only CHCJ Unit applicable to DS0 SNCP function
(D) = Discontinued

## ULSR Ring Application

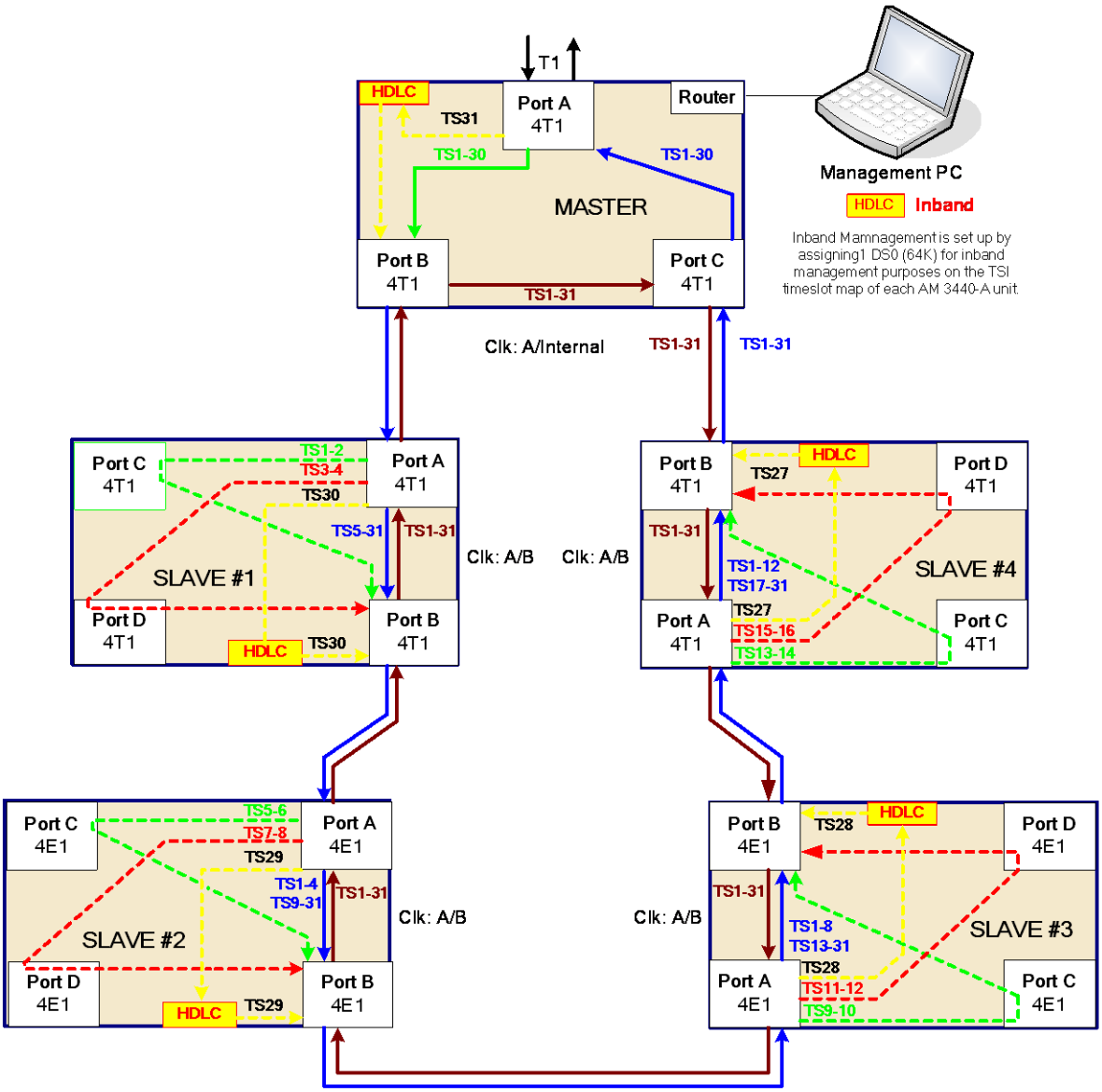


**Note:** ULSR ring does not suport E1 unframed mode. Users must use E1 framed mode to set up a ULSR ring.

## AM3440 ULSR Ring Application through E1/T1 Radio

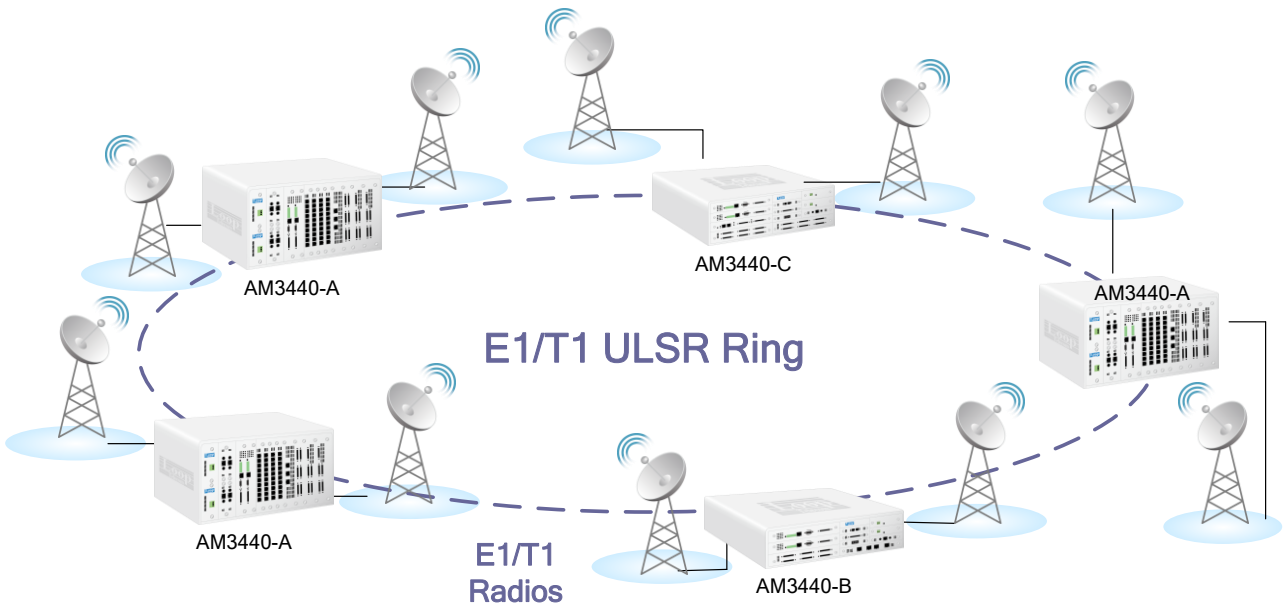


www.looptelecom.com

**LOOP TELECOMMUNICATION INTERNATIONAL, INC.**
**ISO 9001 / ISO 14001**

| Worldwide | Europe | Americas | Australia & New Zealand |
|---|---|---|---|
| 6F, No. 8, Hsin Ann Road | Rue de Culot, 13 | 8 Carrick Road | 3 Imperial Ave, Mount |
| Hsinchu Science Park | BE-1402 Nivelles | Palm Beach Gardens | Waverley, Victoria 3149, |
| Hsinchu, Taiwan 30078 | Belgique | Florida 33418, U.S.A. | Australia |
| +886-3-578-7696 | +32-496-54-27-44 | +1-561-627-7947 | +61-413-382-931 |
| sales@looptelecom.com | eu_sales@looptelecom.com | ncsa_sales@looptelecom.com | aus_sales@looptelecom.com |